0 611 254 803
Issue / Stand 14-03-27

Fig./Abb. 1

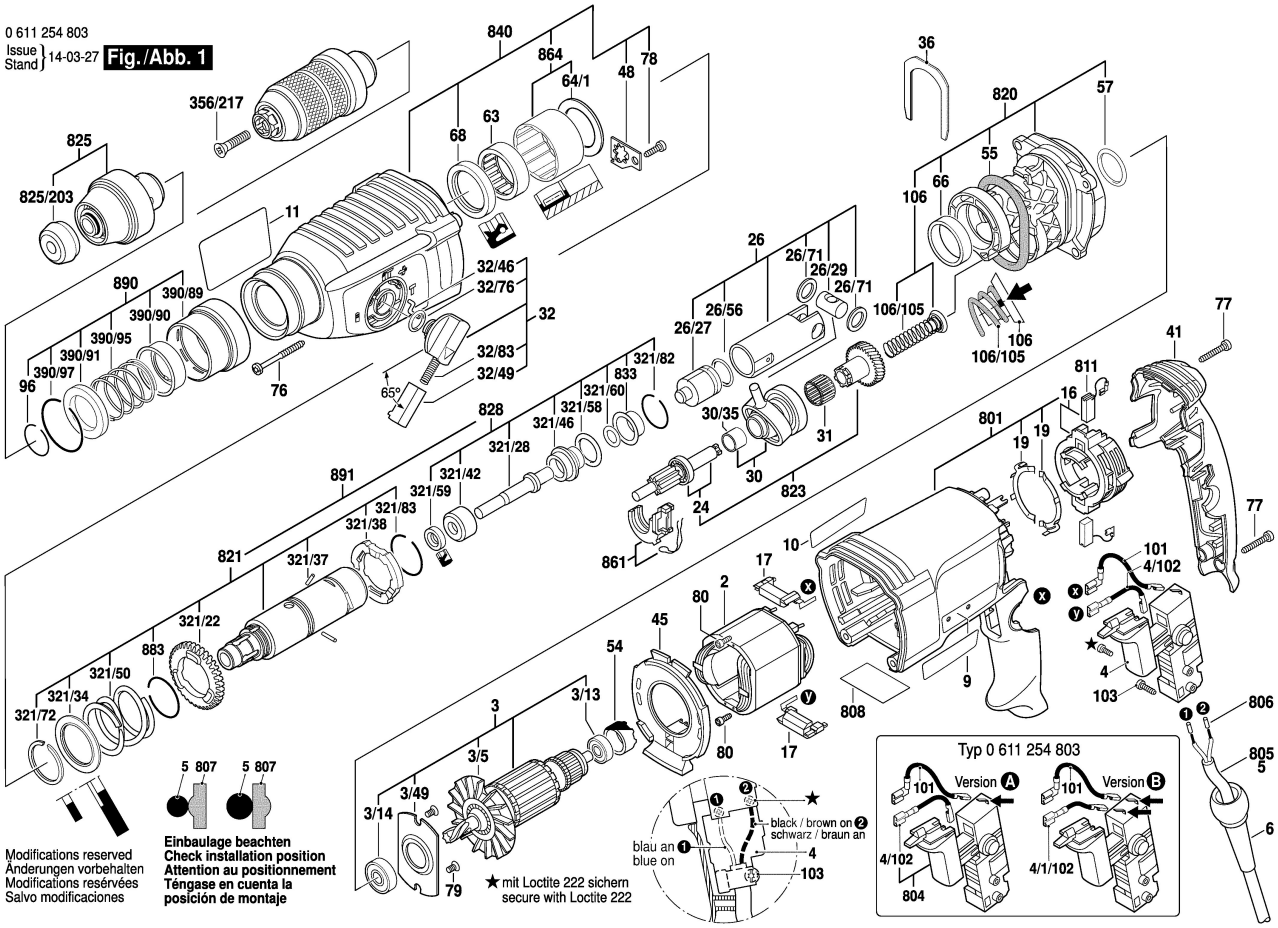

0 611 254 803
Issue / Stand 14-03-27

Fig./Abb. 2

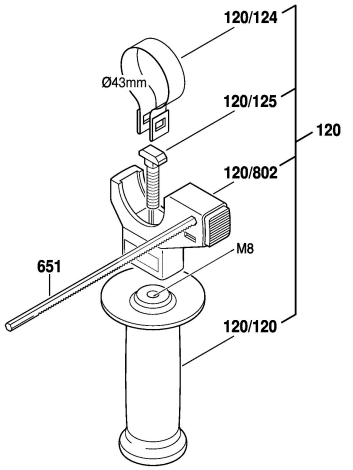

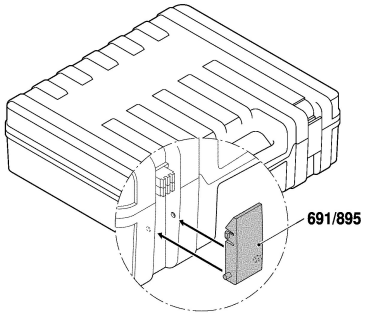

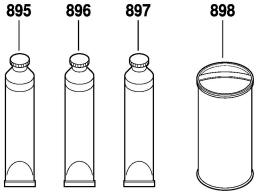

Modifications reserved
Änderungen vorbehalten
Modifications resérvées
Salvo modificaciones