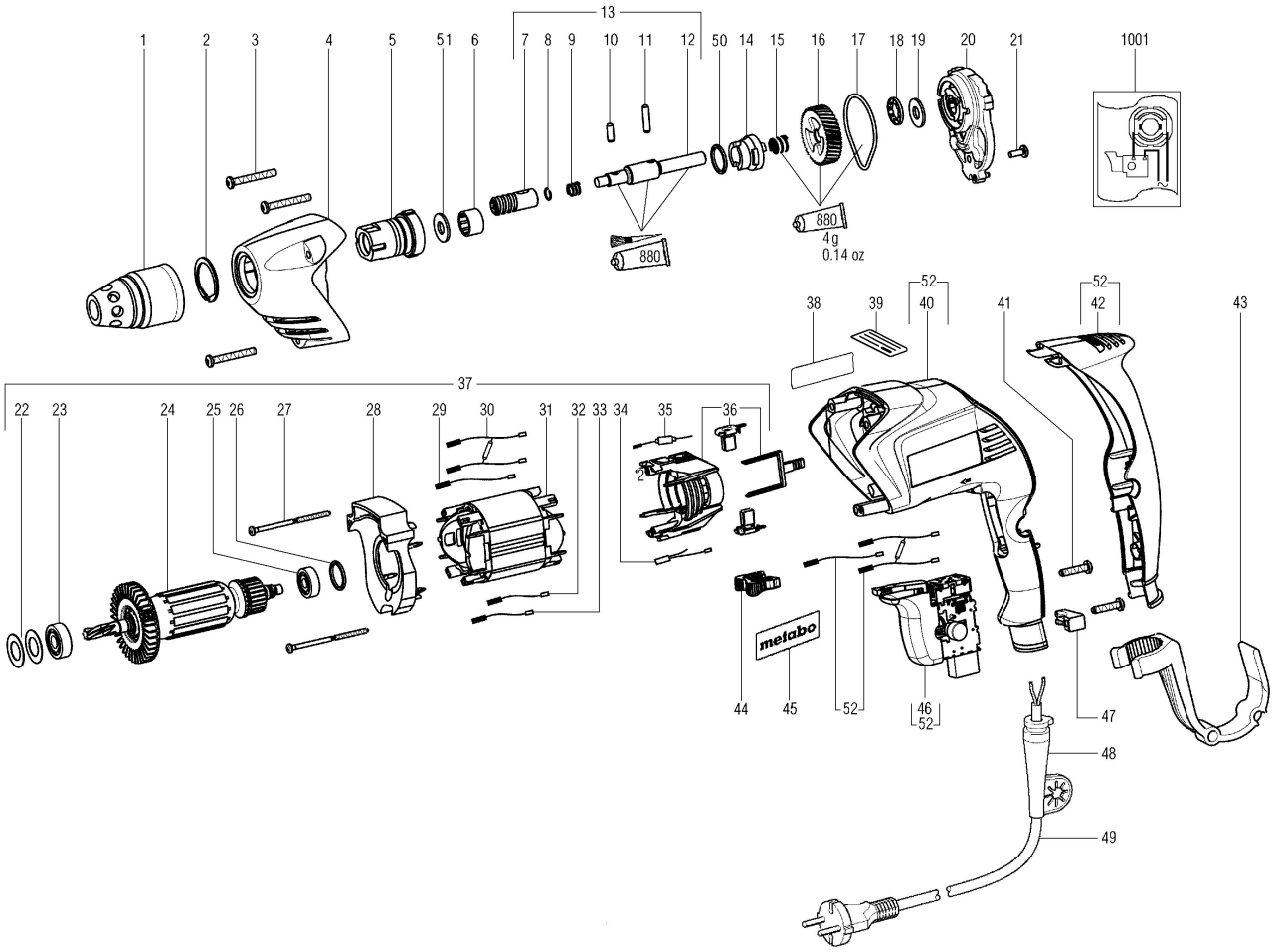
880
4 g
0.14 oz
metabo

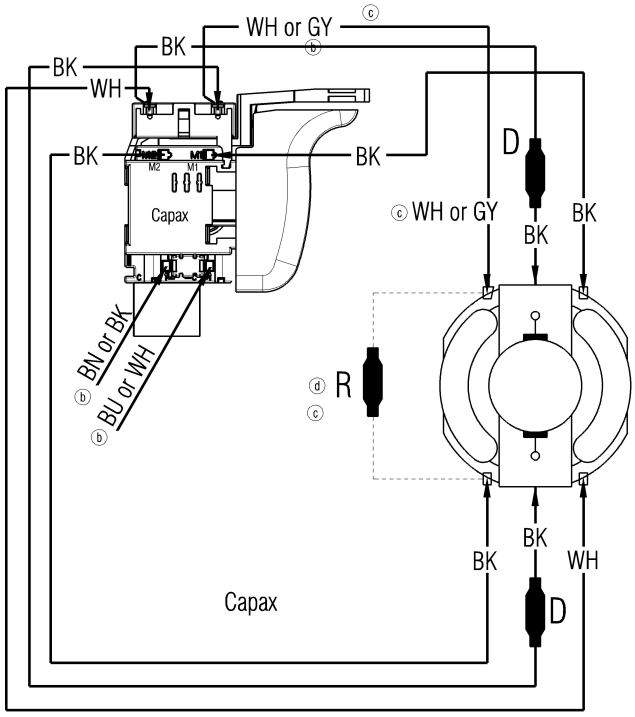
WH or GY
BK
WH
Capax
BN or BK
BU or WH
D
R
Capax

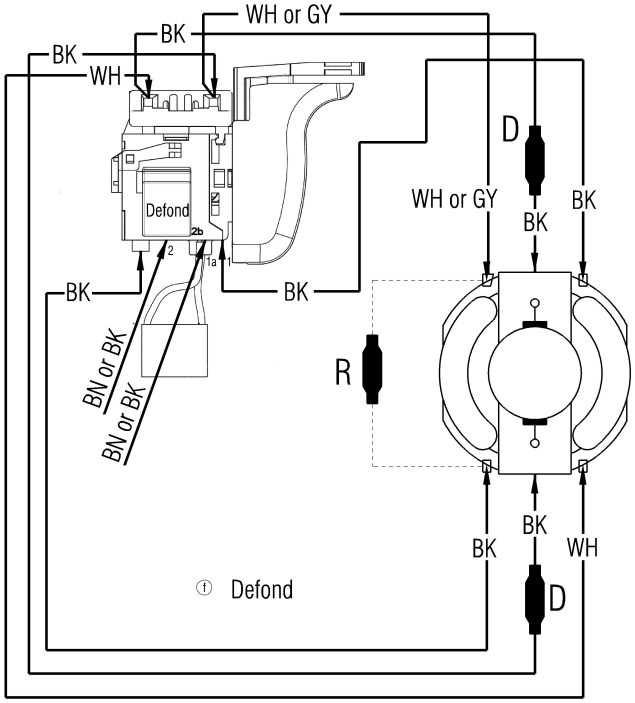
WH or GY
BK
WH
Defond
BN or BK
D
R
Defond