3 600 H81 702

Stand ~~12-06-25~~
Issue 12-08-16

Fig./Abb. 1

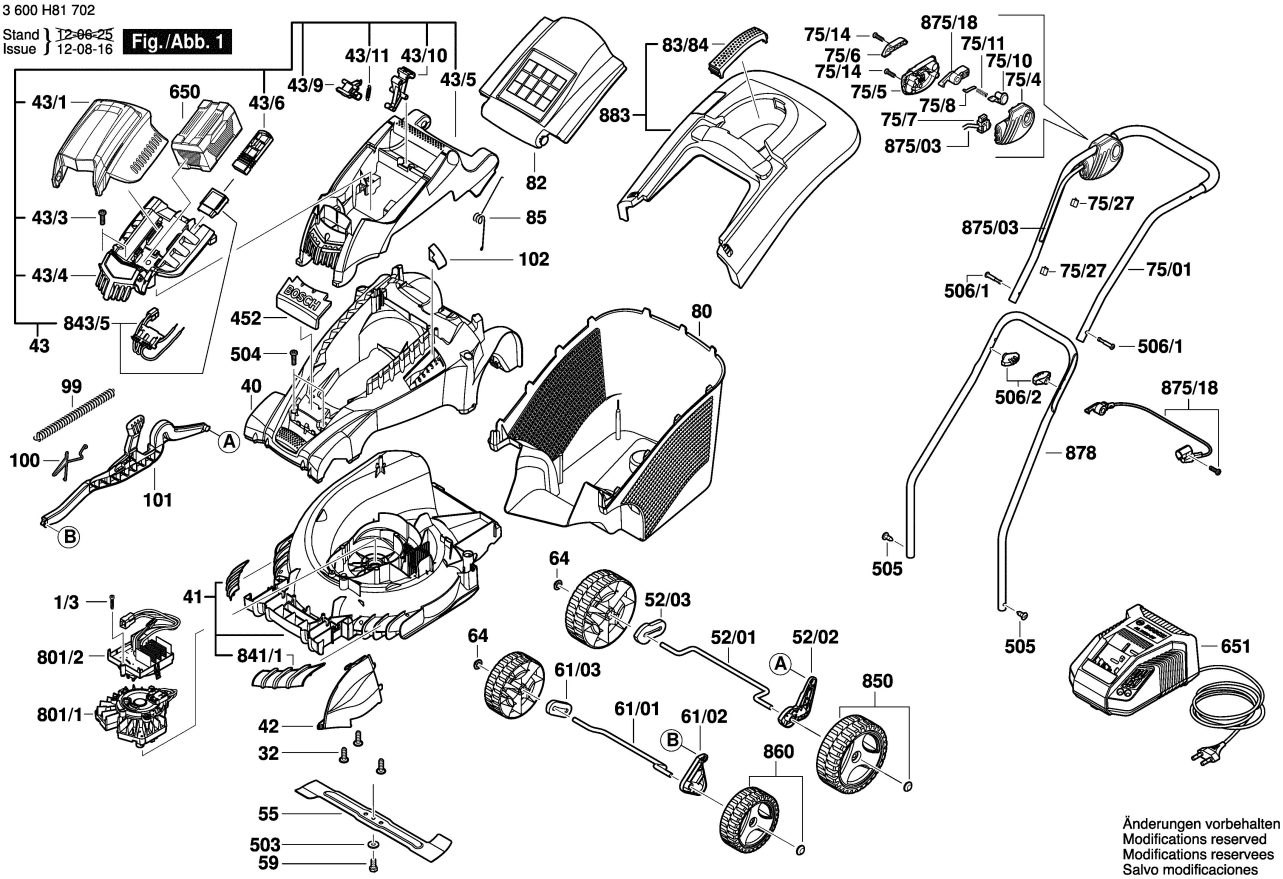

Änderungen vorbehalten
Modifications reserved
Modifications reservees
Salvo modificaciones