3 600 H82 070

Stand } ~~12-08-29~~
Issue } 12-08-30

Fig./Abb. 1

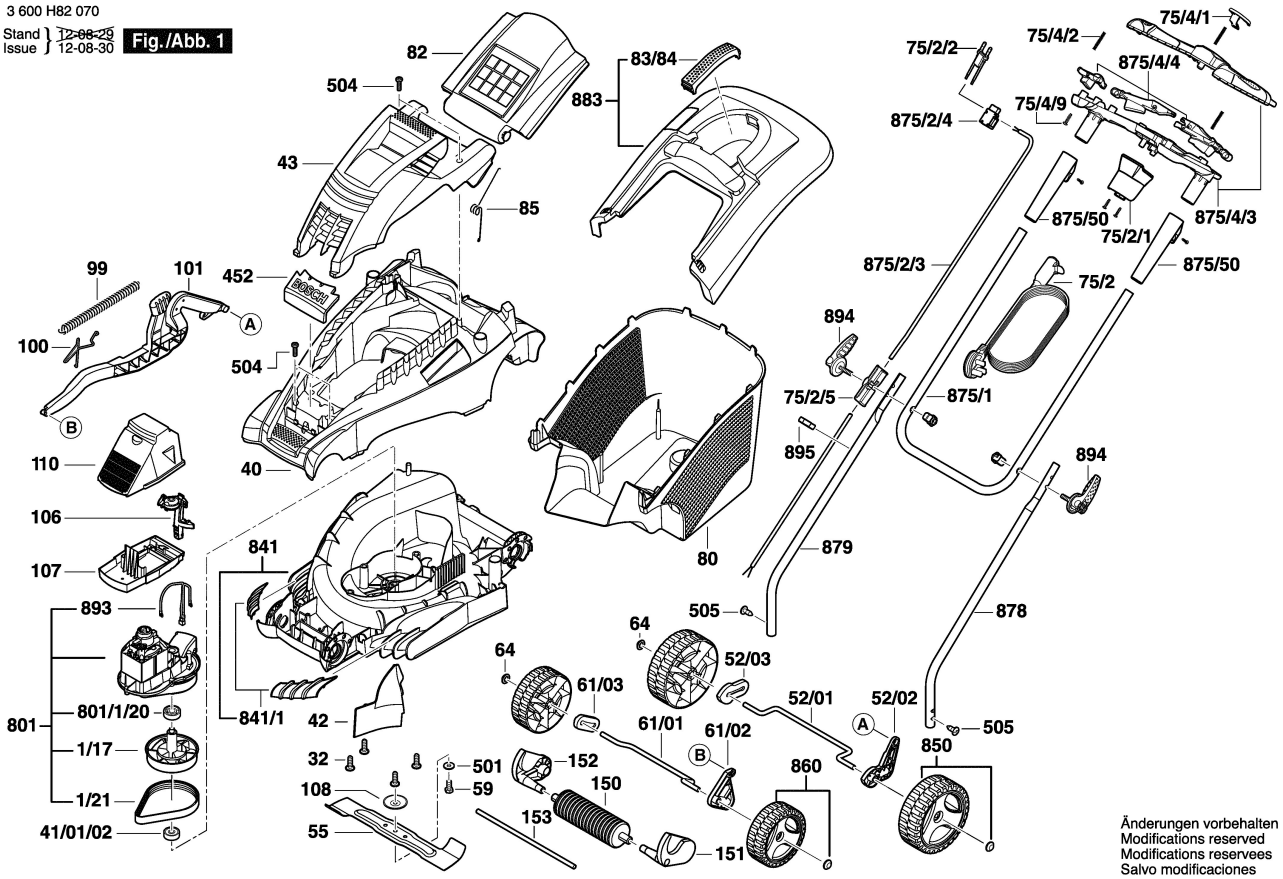

Änderungen vorbehalten
Modifications reserved
Modifications reservees
Salvo modificaciones