3 600 HA2 200
Stand } ~~14-08-18~~
Issue } 14-08-19

Fig. /Abb. 1

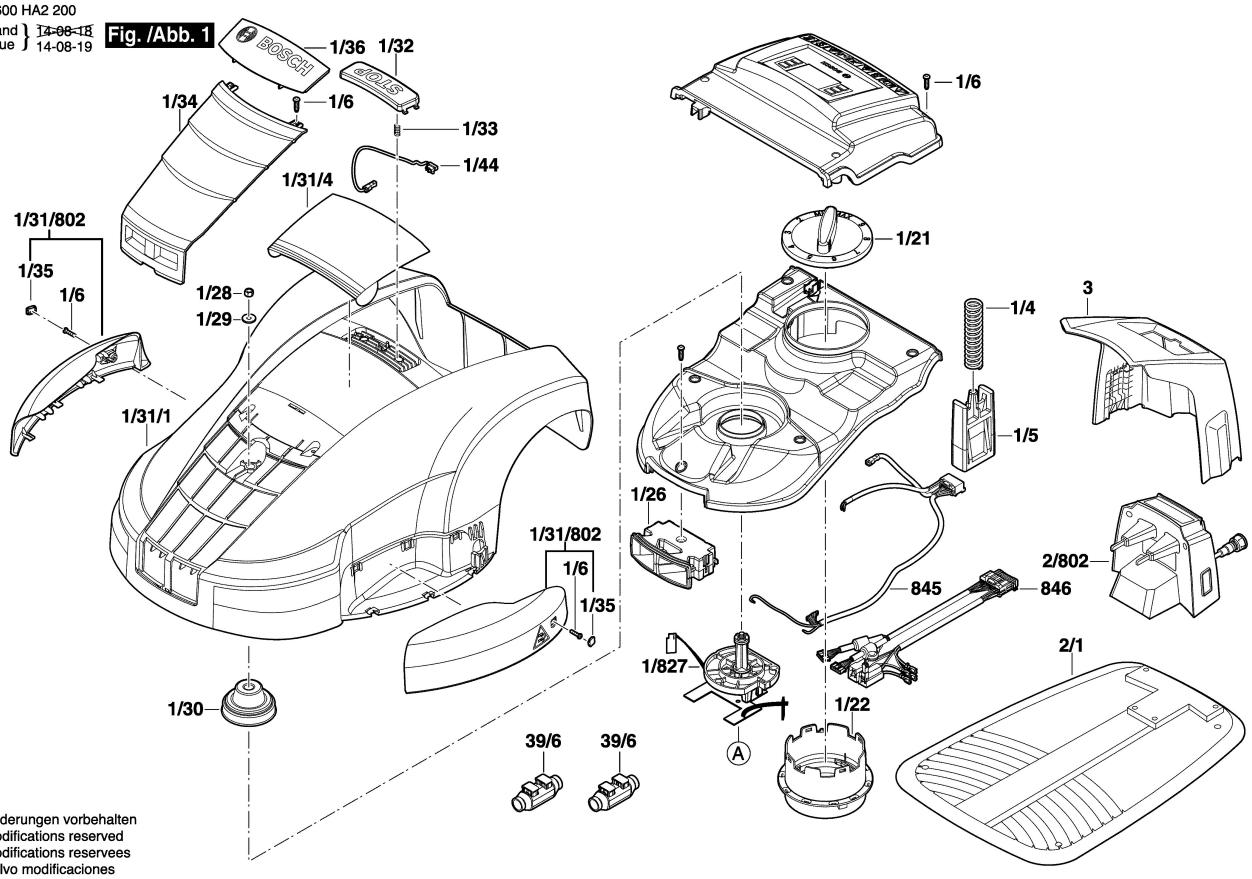

Änderungen vorbehalten
Modifications reserved
Modifications reservees
Salvo modificaciones

3 600 HA2 200
Stand } ~~14-09~~
Issue } 14-10-29

Fig. /Abb. 2

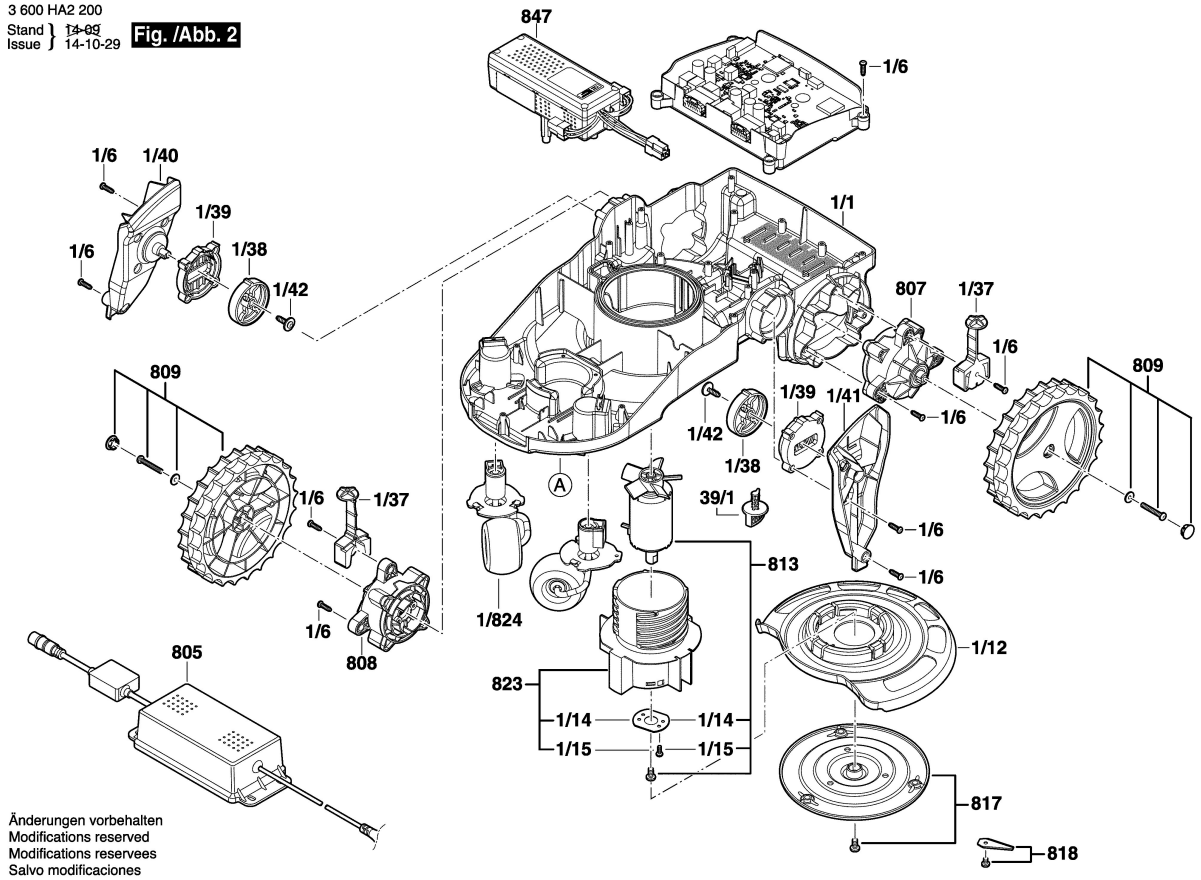

Änderungen vorbehalten
Modifications reserved
Modifications reservees
Salvo modificaciones