3 601 B18 092

Stand } 09-02
Issue } 14-02-07
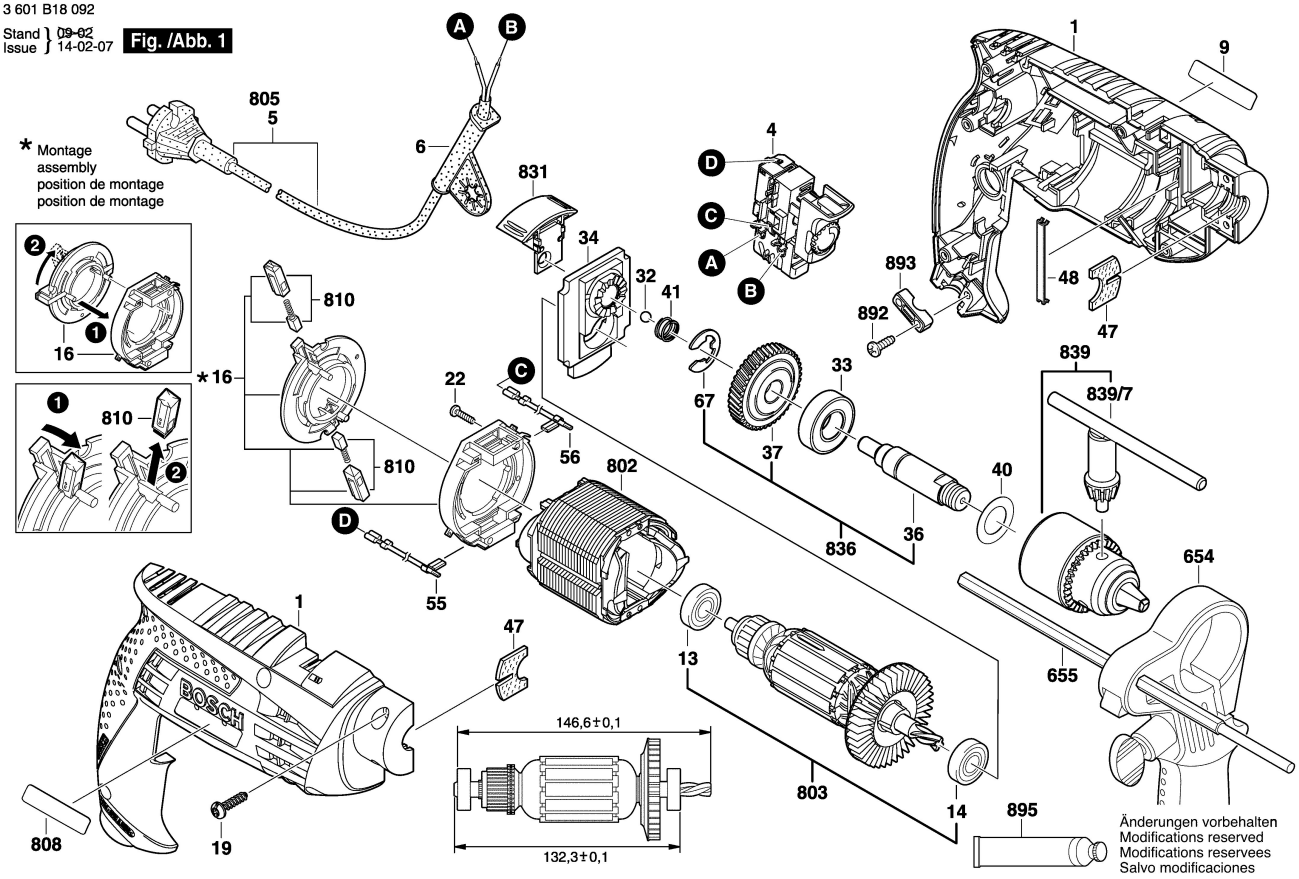
Fig. /Abb. 1