3 601 B18 093

Stand } ~~12-07~~
Issue } 14-02-07
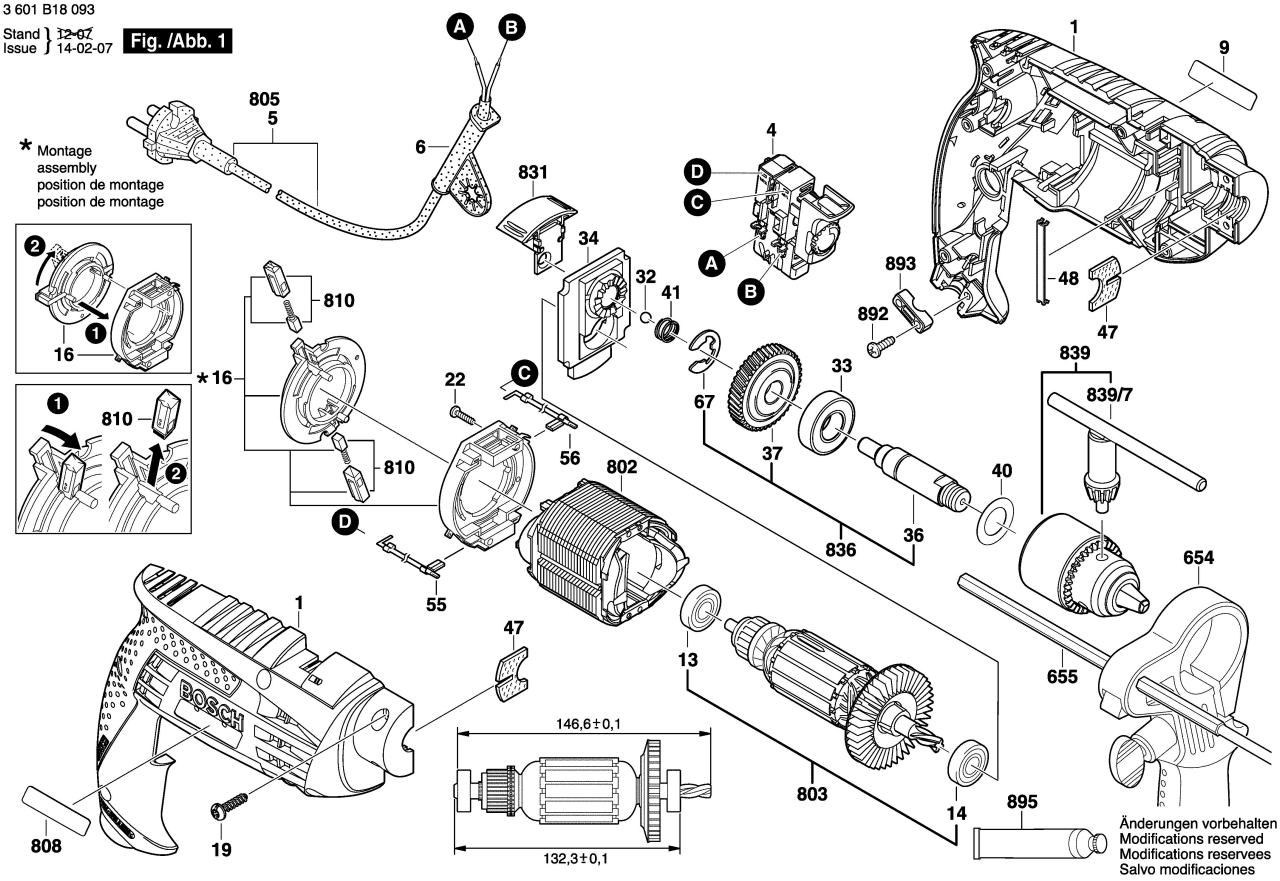
Fig. /Abb. 1