3 601 D40 300
Issue / Stand } 10-10-12 **Fig./Abb. 1**

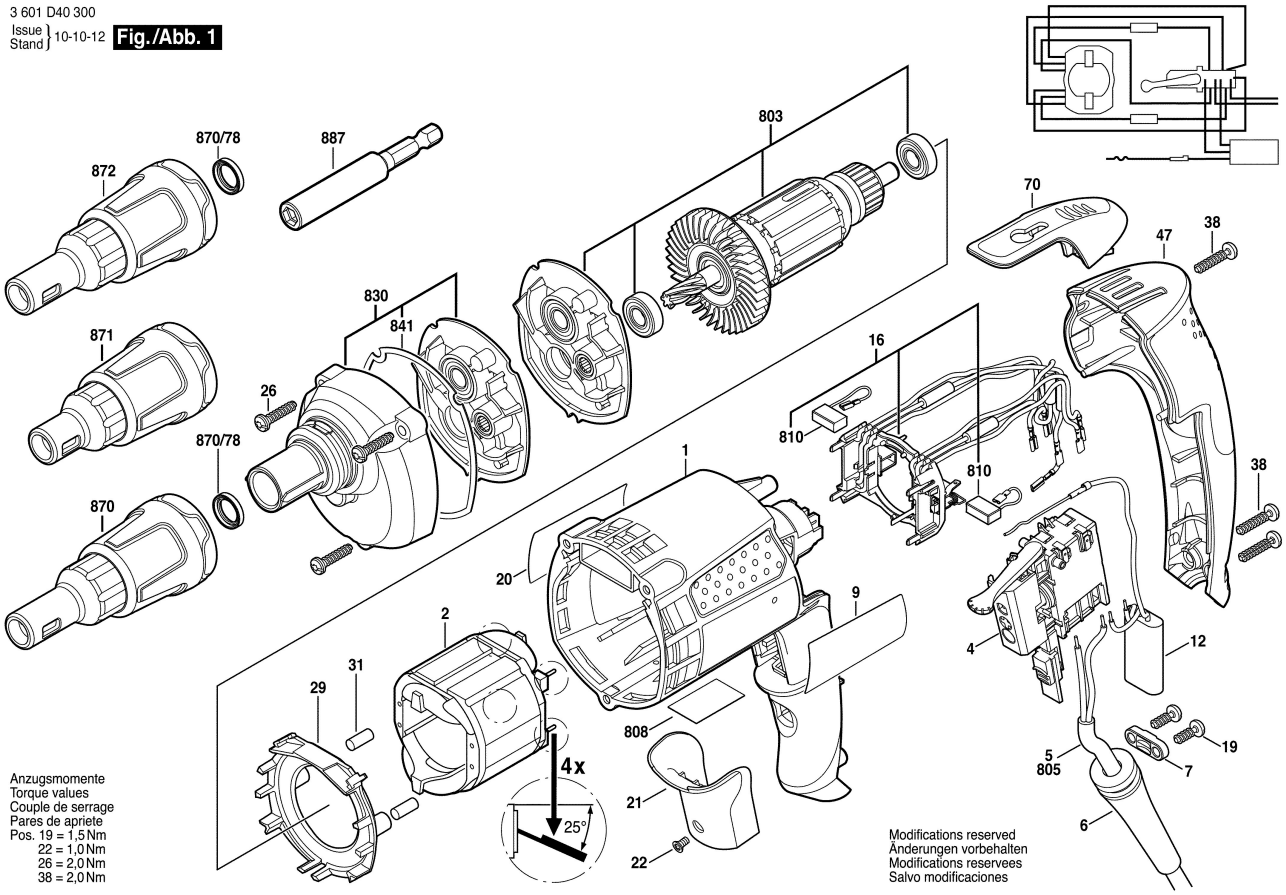

Anzugsmomente
Torque values
Couple de serrage
Pares de apriete
Pos. 19 = 1,5 Nm
22 = 1,0 Nm
26 = 2,0 Nm
38 = 2,0 Nm

Modifications reserved
Änderungen vorbehalten
Modifications reservees
Salvo modificaciones