3 601 J96 450

Stand } ~~05-12~~
Issue } 06-03-08

Fig./Abb. 1

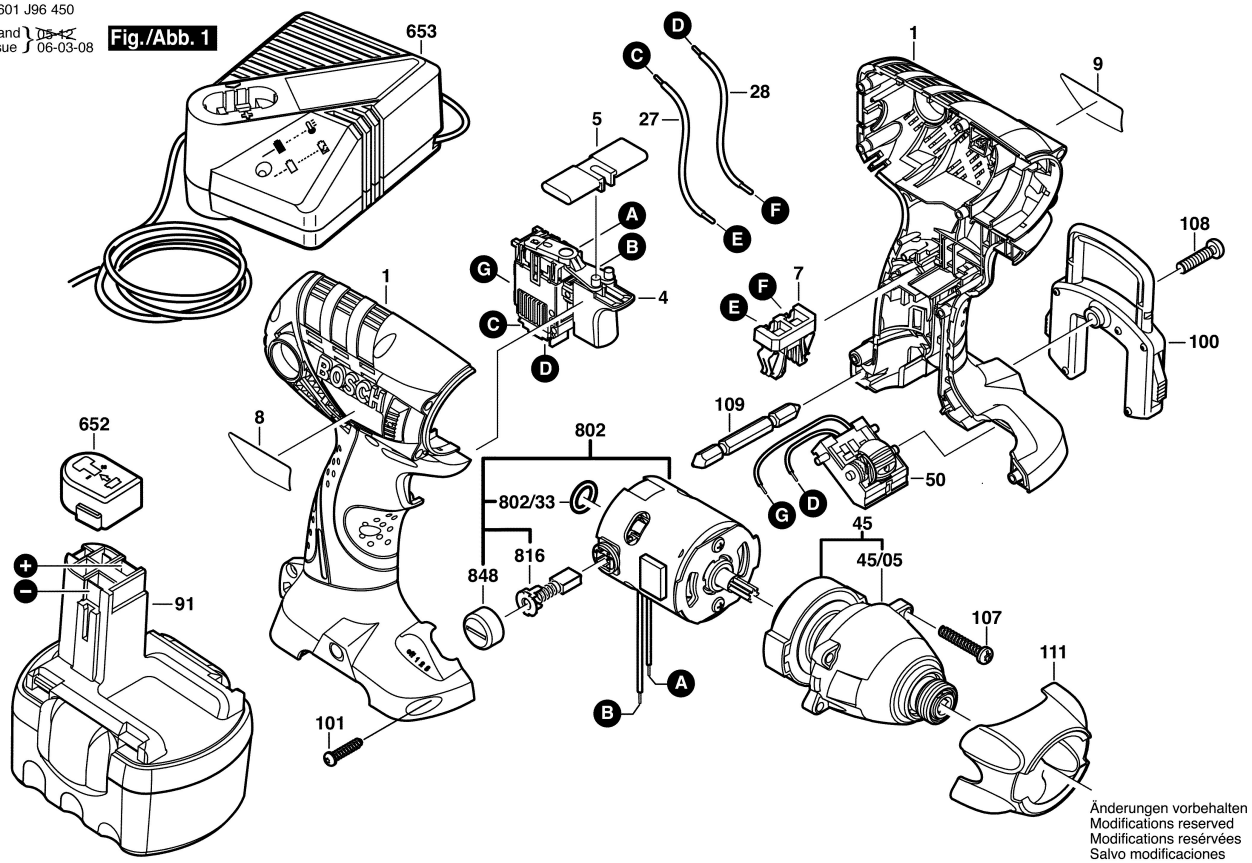

Änderungen vorbehalten
Modifications reserved
Modifications resérvées
Salvo modificaciones