3 603 C85 700
Stand } ~~05-11~~
Issue } 05-12-01

Fig./Abb. 1

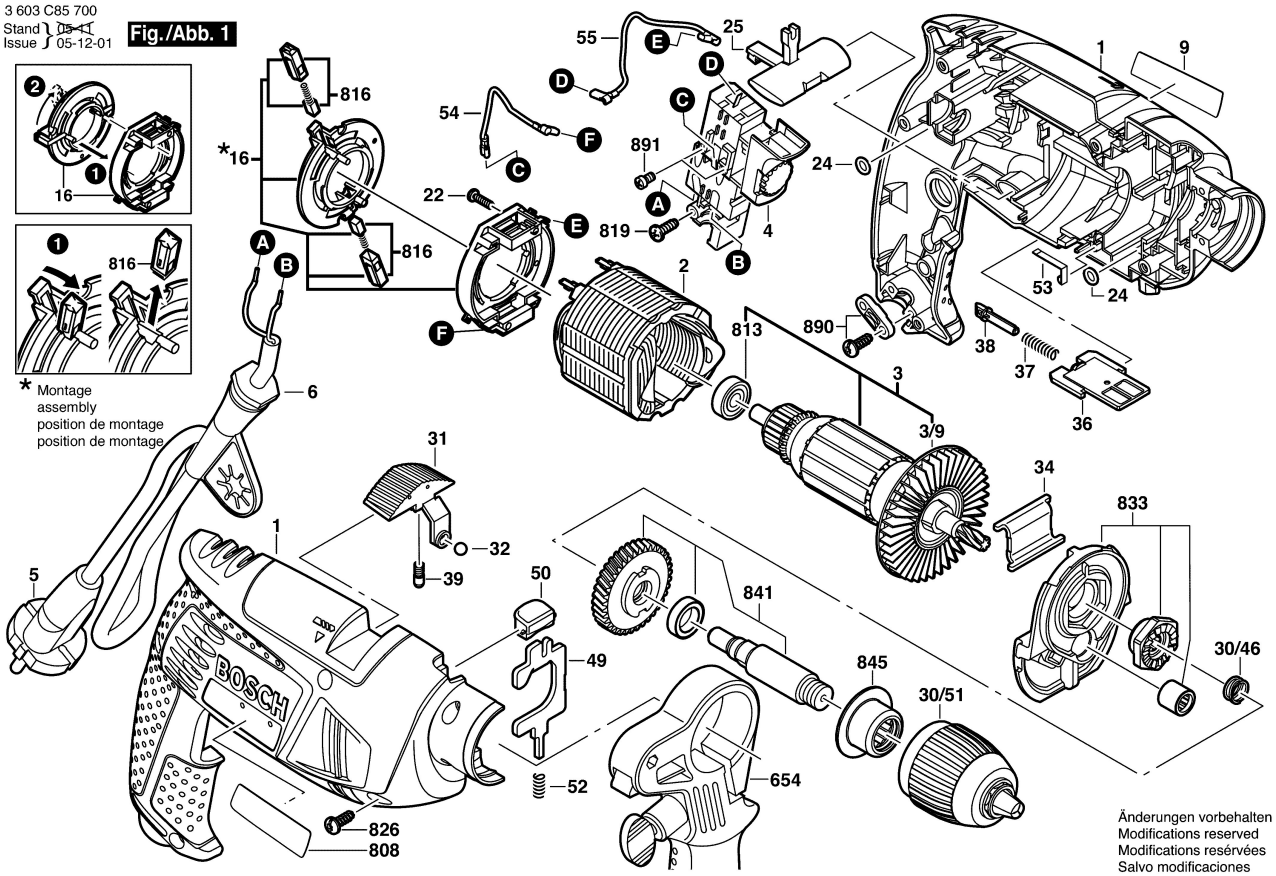

3 603 C85 700
Stand } ~~09-07~~
Issue } 09-01-19

Fig./Abb. 2

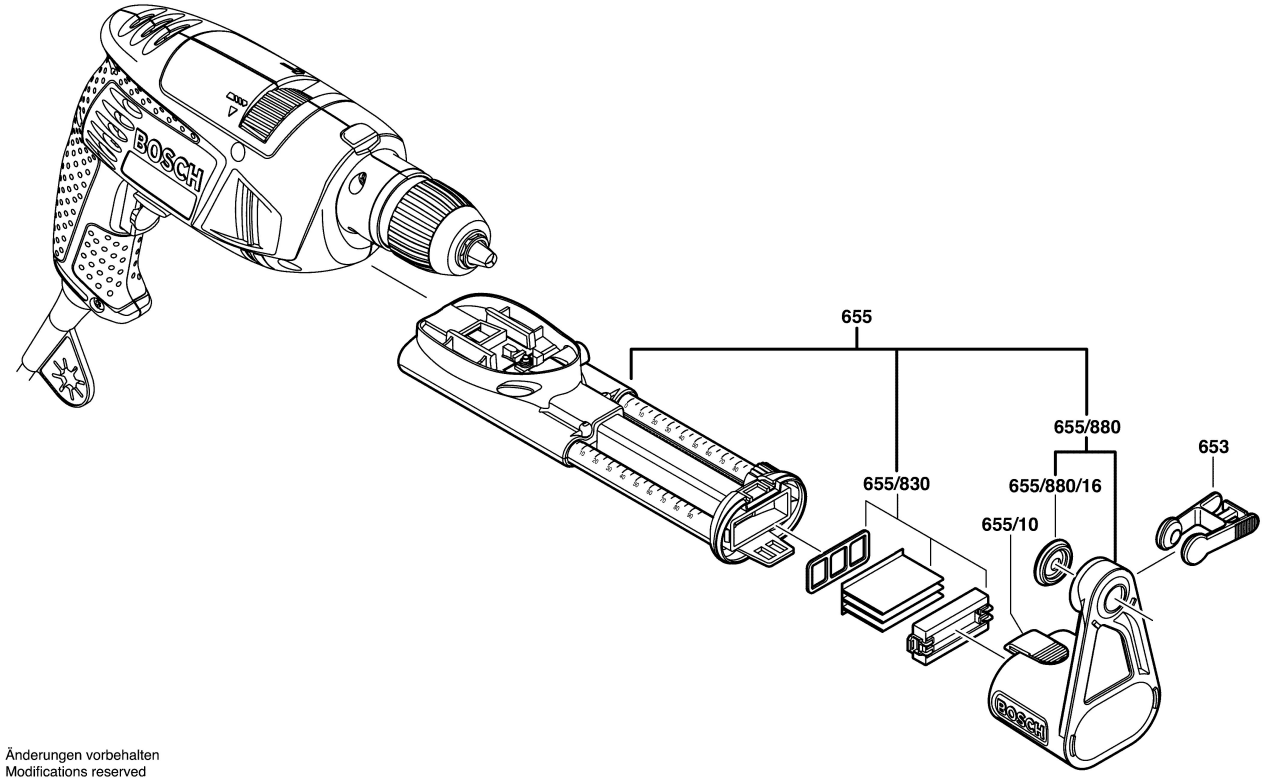

Änderungen vorbehalten
Modifications reserved
Modifications resérvées
Salvo modificaciones