3 603 D13 400
Stand ~~09-02~~
Issue 09-08-19

Fig./Abb. 1

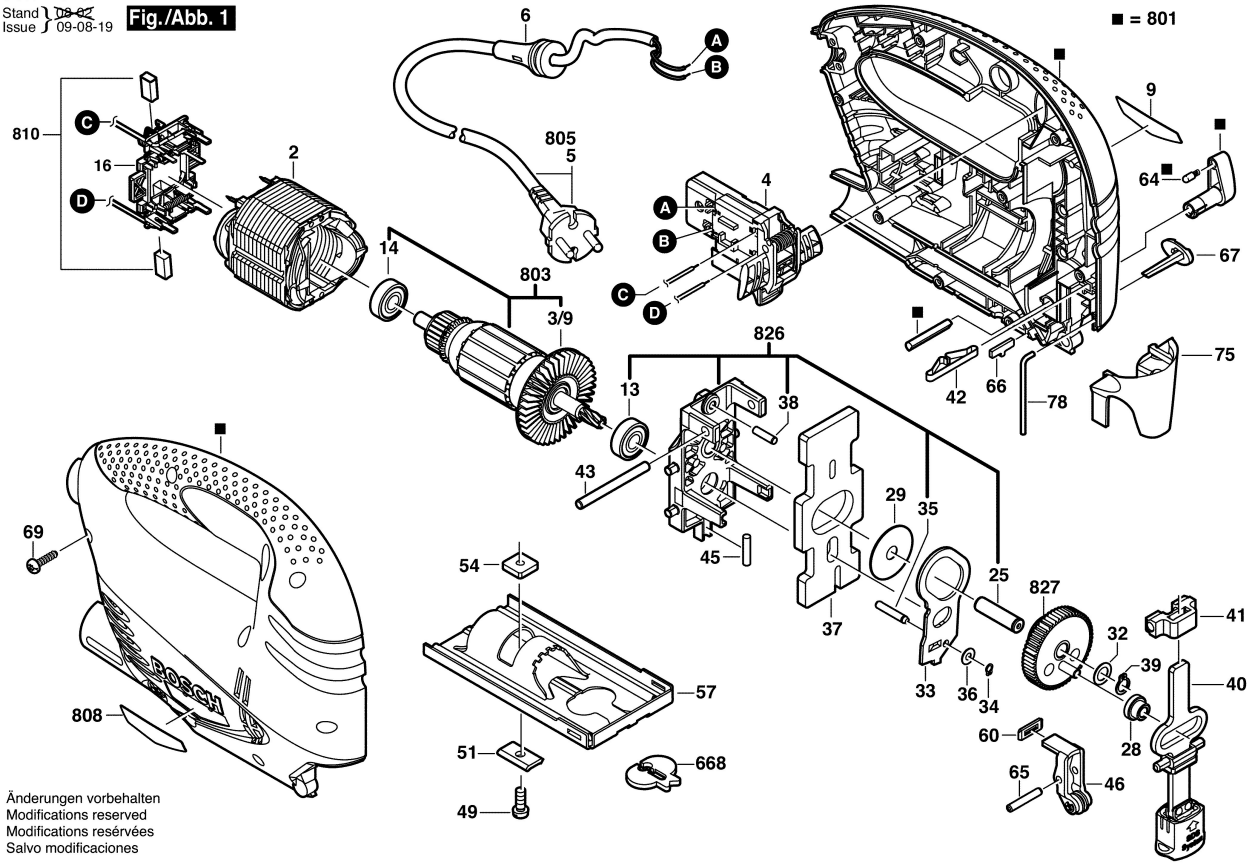

Änderungen vorbehalten
Modifications reserved
Modifications resérvées
Salvo modificaciones