3 616 C01 A70

Stand ~~08-11~~
Issue 11-09-14

Fig./Abb. 1

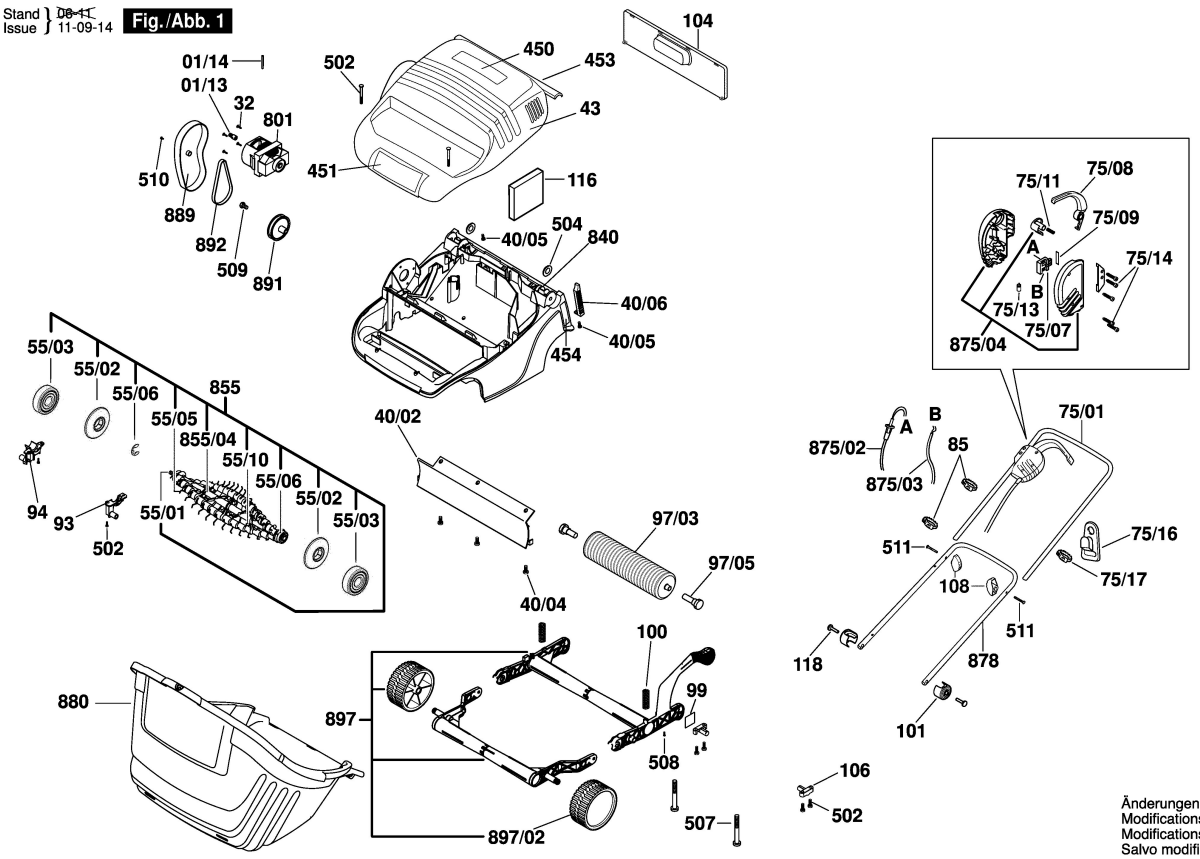

Änderungen vorbehalten
Modifications reserved
Modifications reservees
Salvo modificaciones