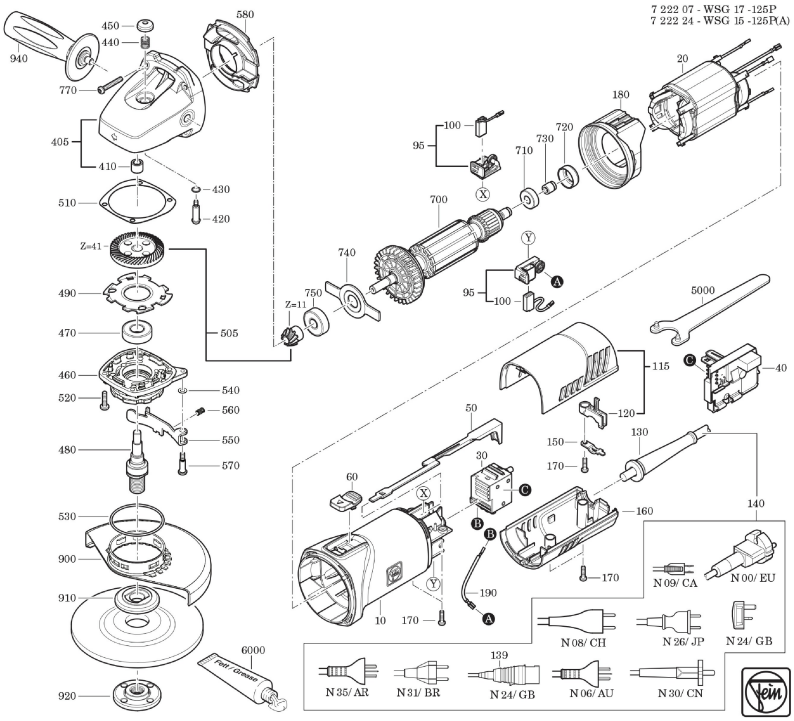Type: WSG 17-125 P (50/60Hz, 110/120V)
Part no.: 72220724110