F 012 444 503
Issue Stand 00-11-07
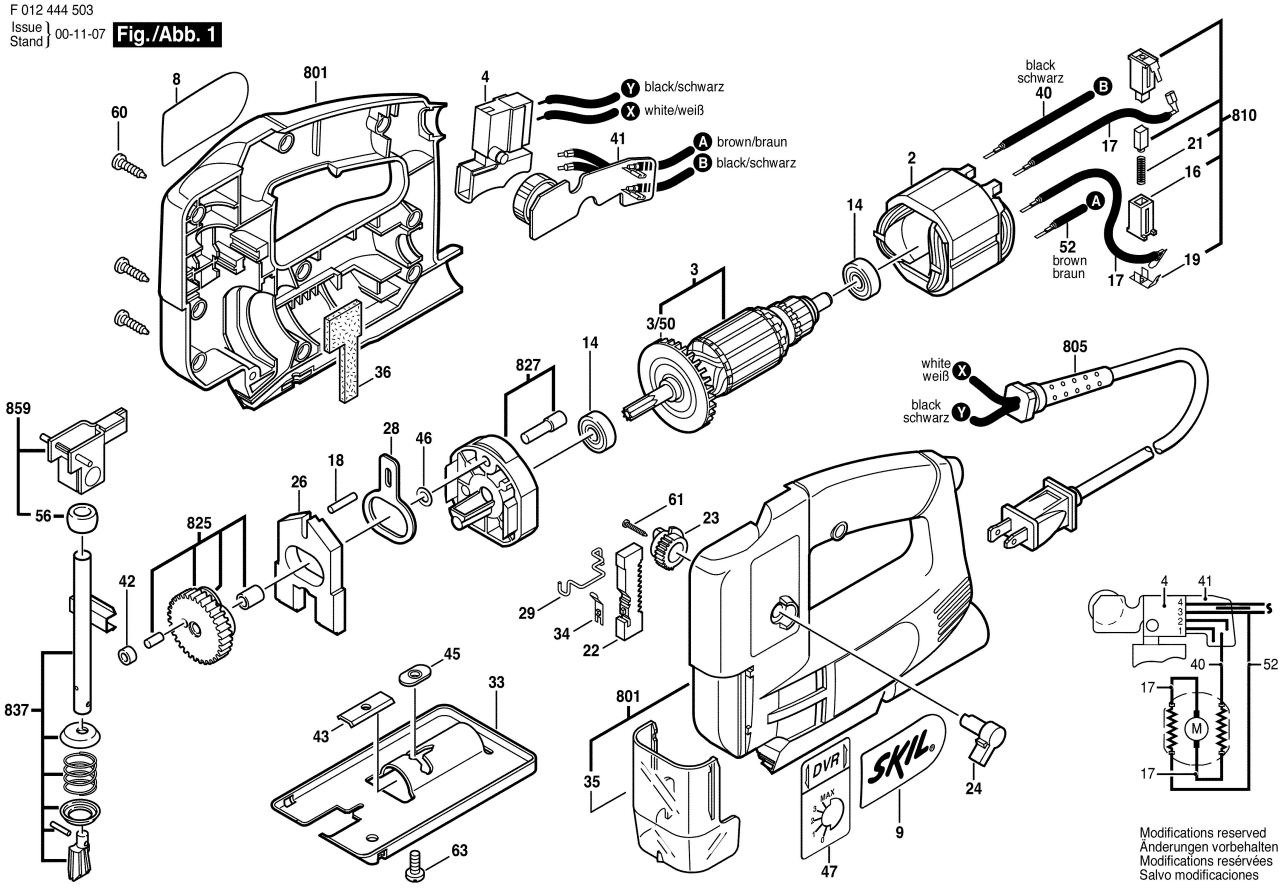
Fig./Abb. 1