F012 447 000
Issue
Stand } 00-11-21
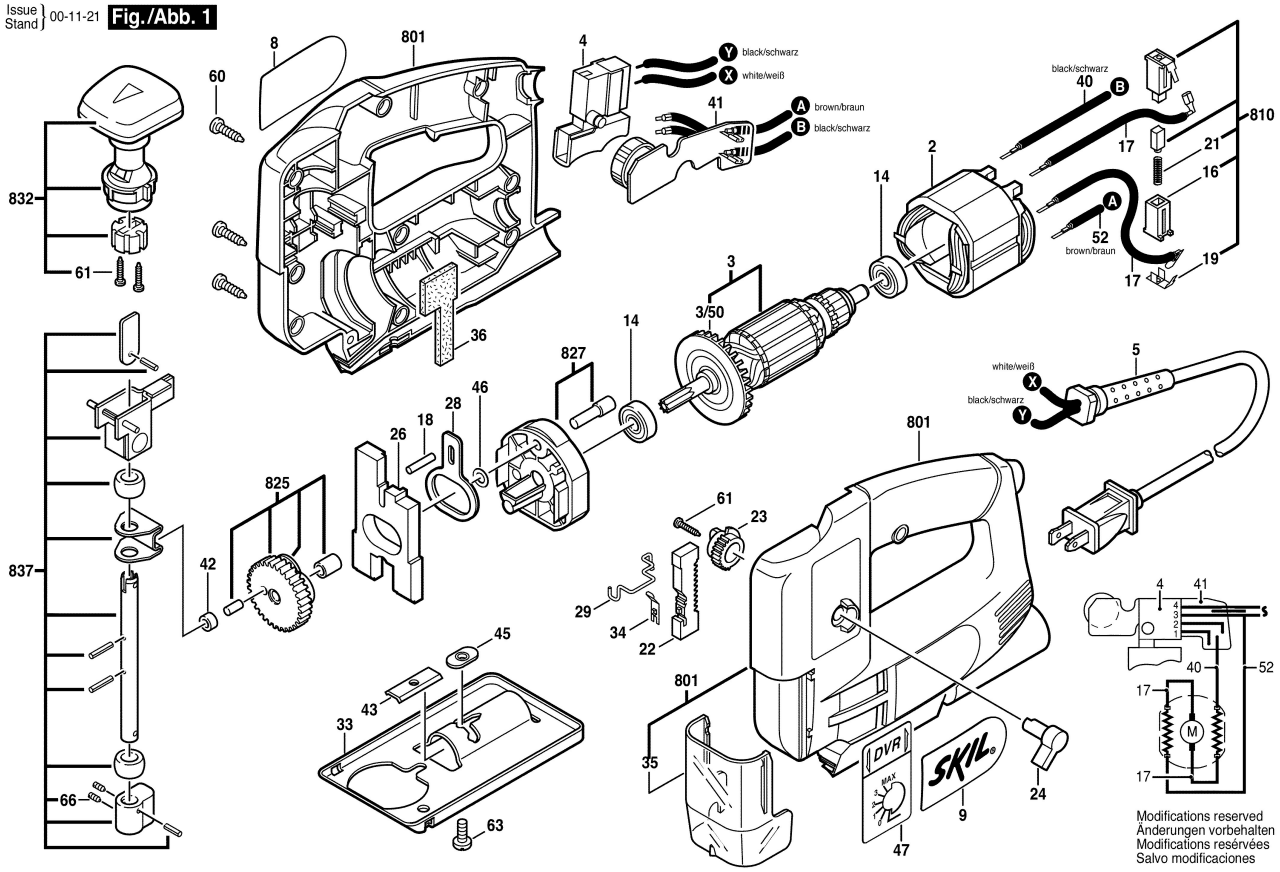
Fig./Abb. 1