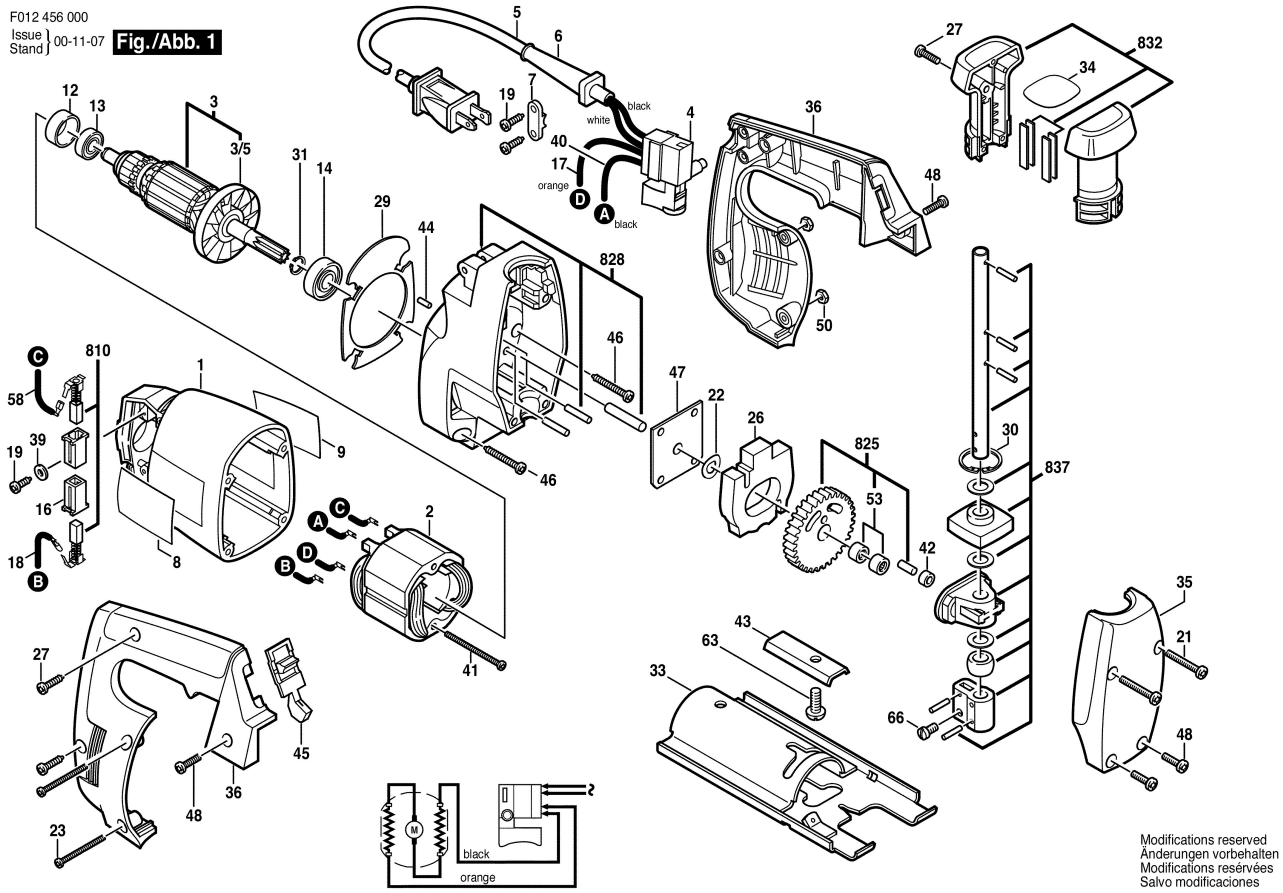F012 456 000
Issue
Stand } 00-11-07 **Fig./Abb. 1**