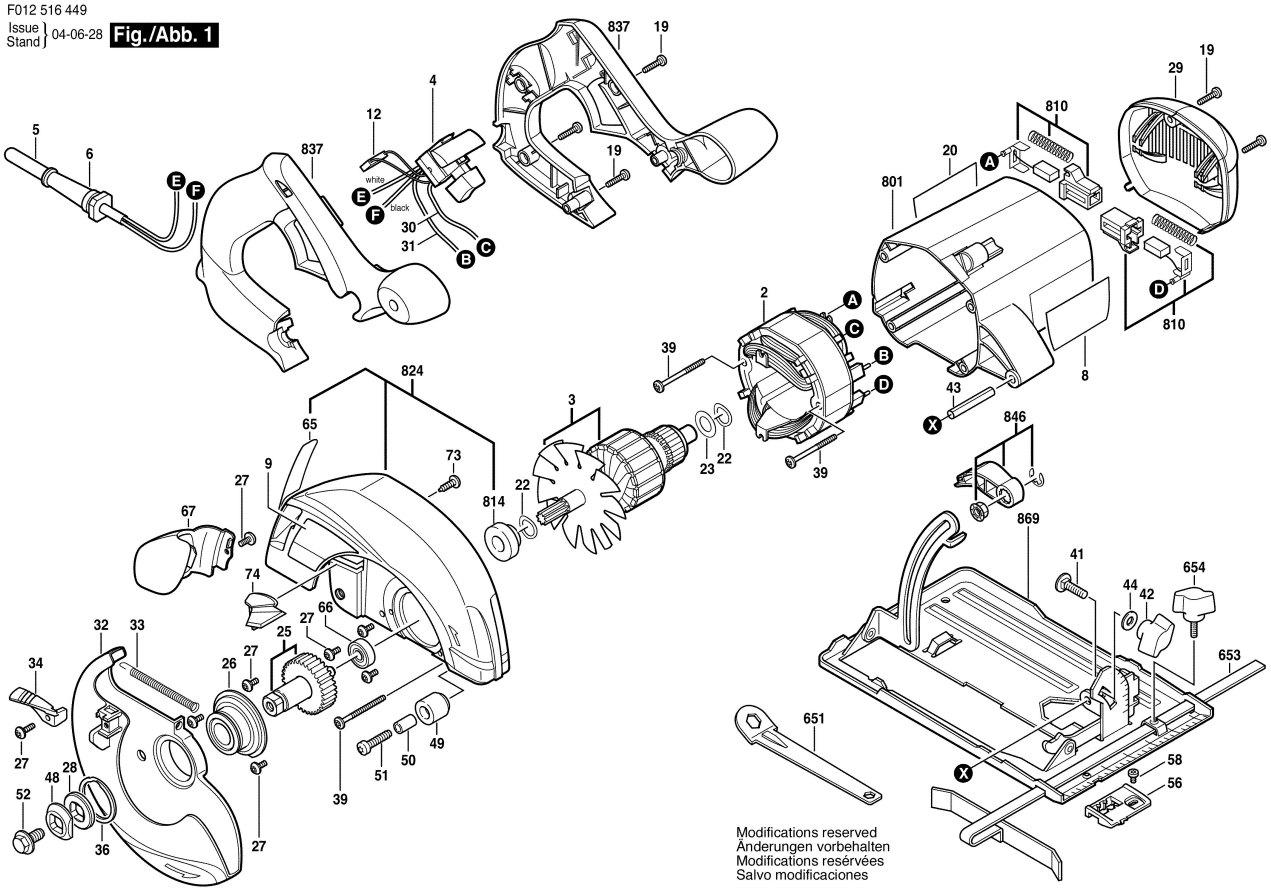F012 516 449
Issue Stand } 04-06-28 **Fig./Abb. 1**