F012 515 000
Issue Stand 00-11-06
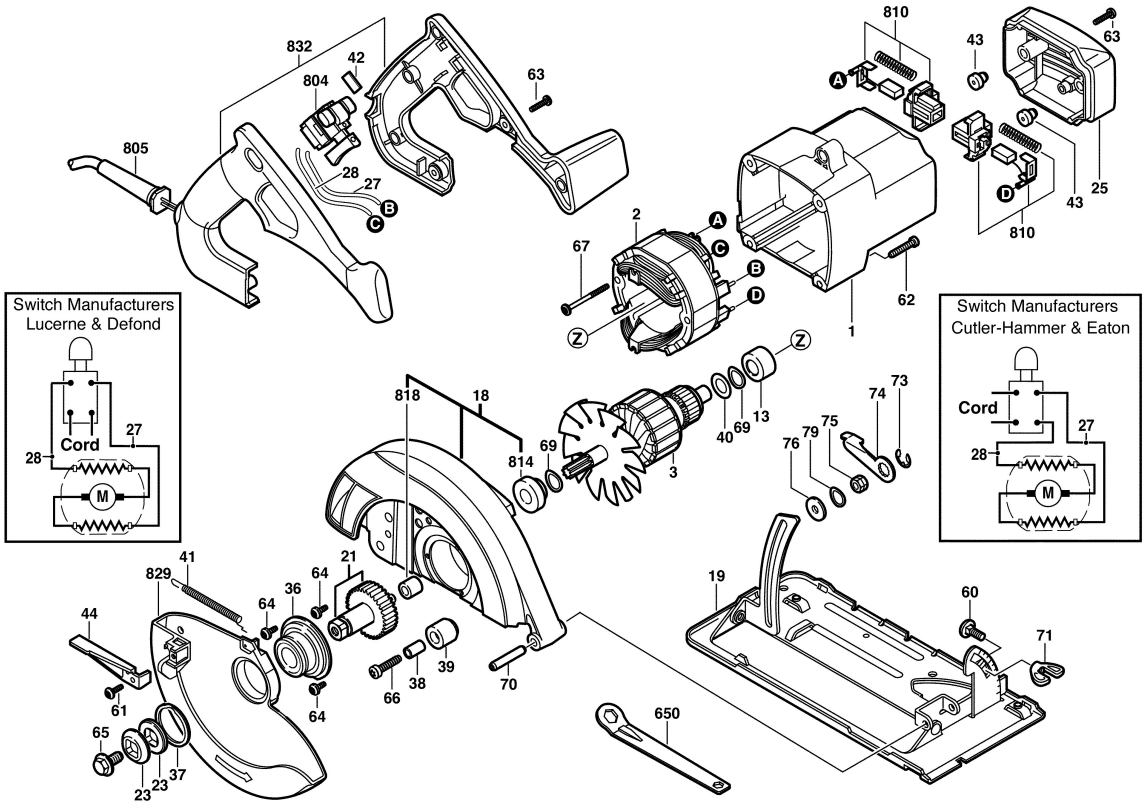
Fig./Abb. 1