F012 535 080

Issue / Stand } 99-12-27
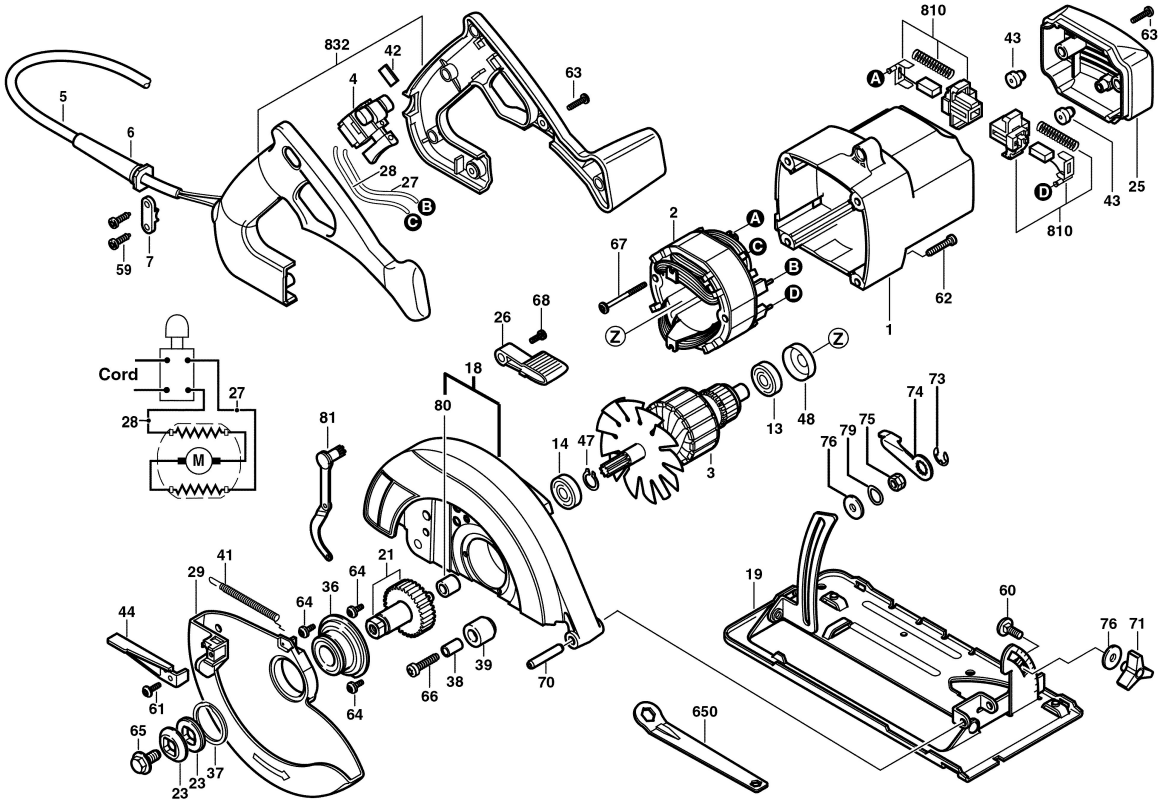
Fig./Abb. 1