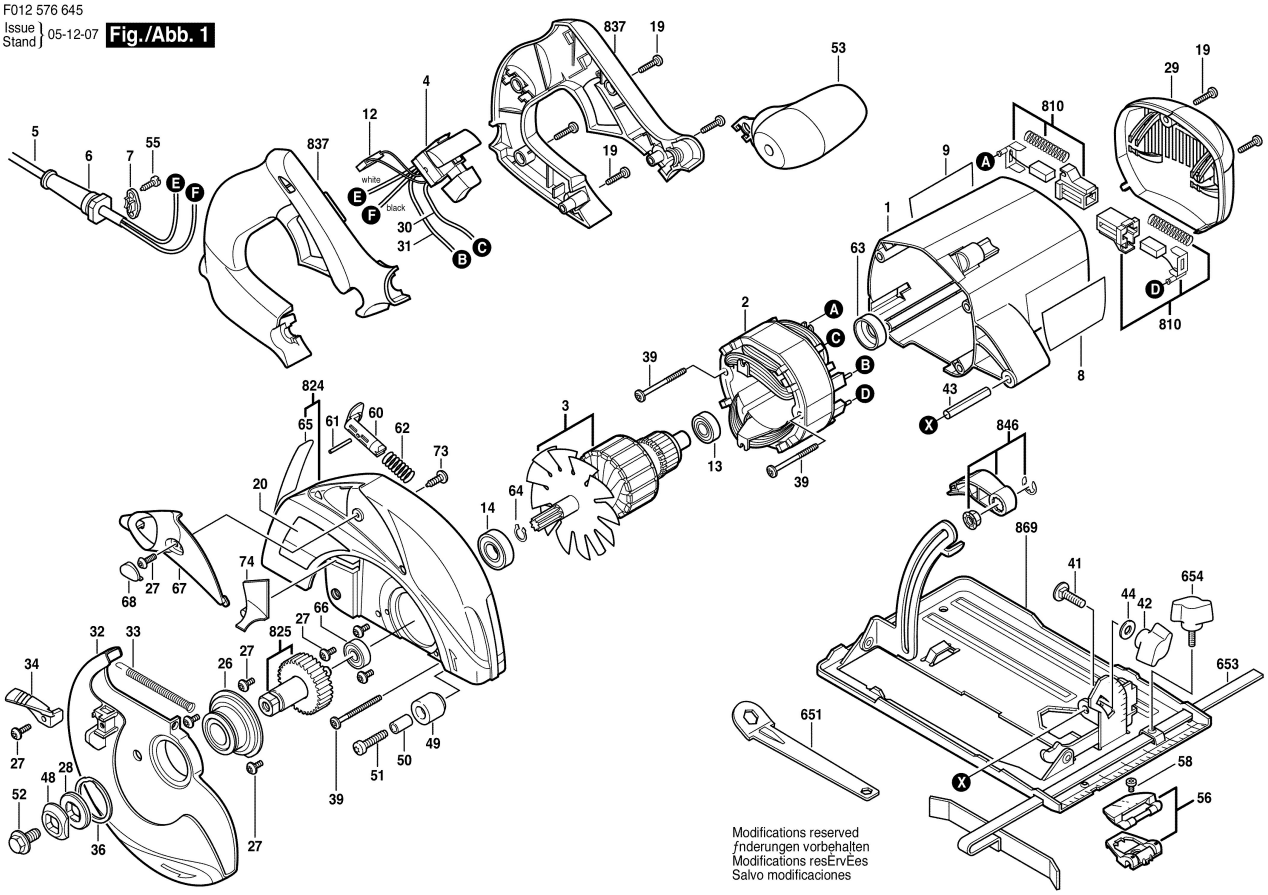F012 576 645
Issue
Stand } 05-12-07 **Fig./Abb. 1**