F 013 039 517
Stand
Issue } 04-08-17
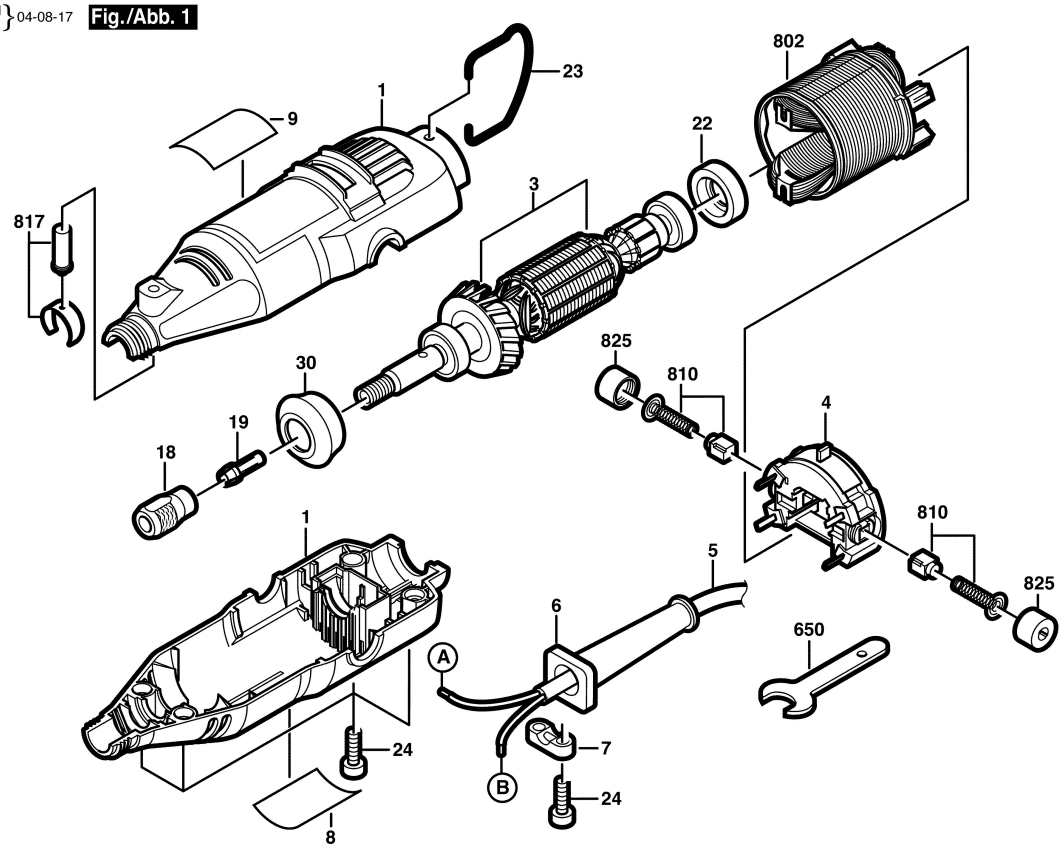
Fig./Abb. 1