F 013 028 585
Stand
Issue } 00-11-07
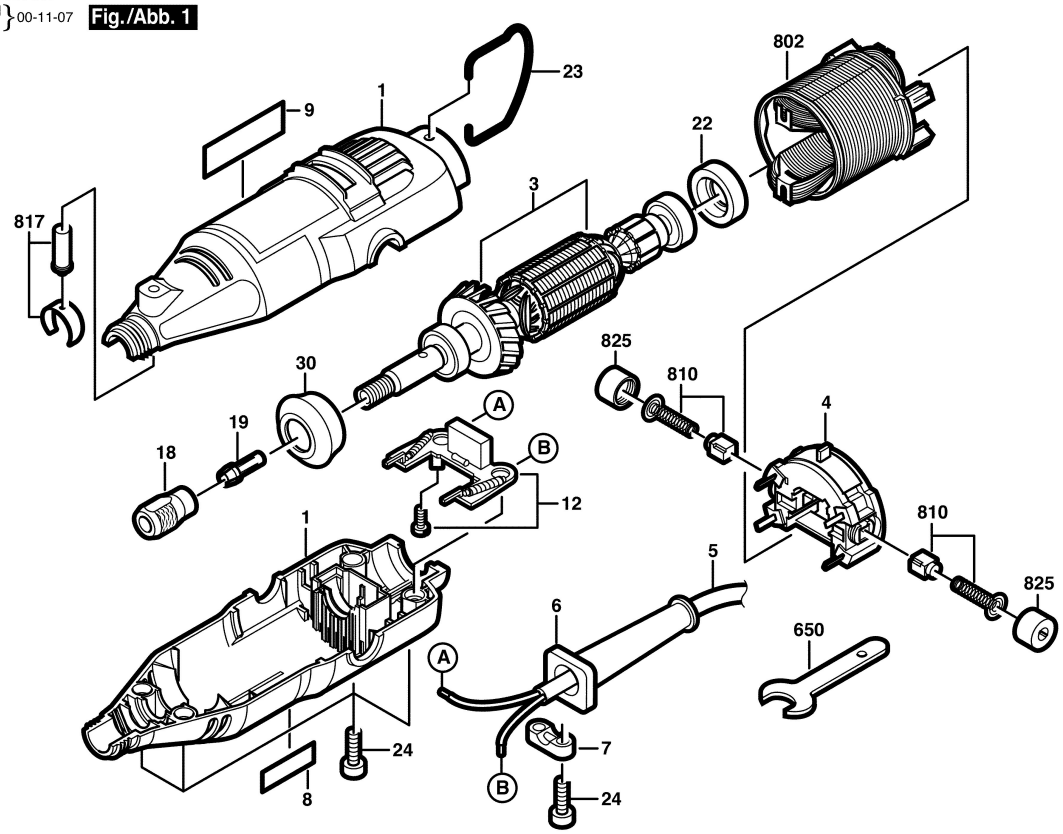
Fig./Abb. 1