F 015 182 001
Stand ~~04-01~~
Issue 06-06-02

Fig./Abb. 1

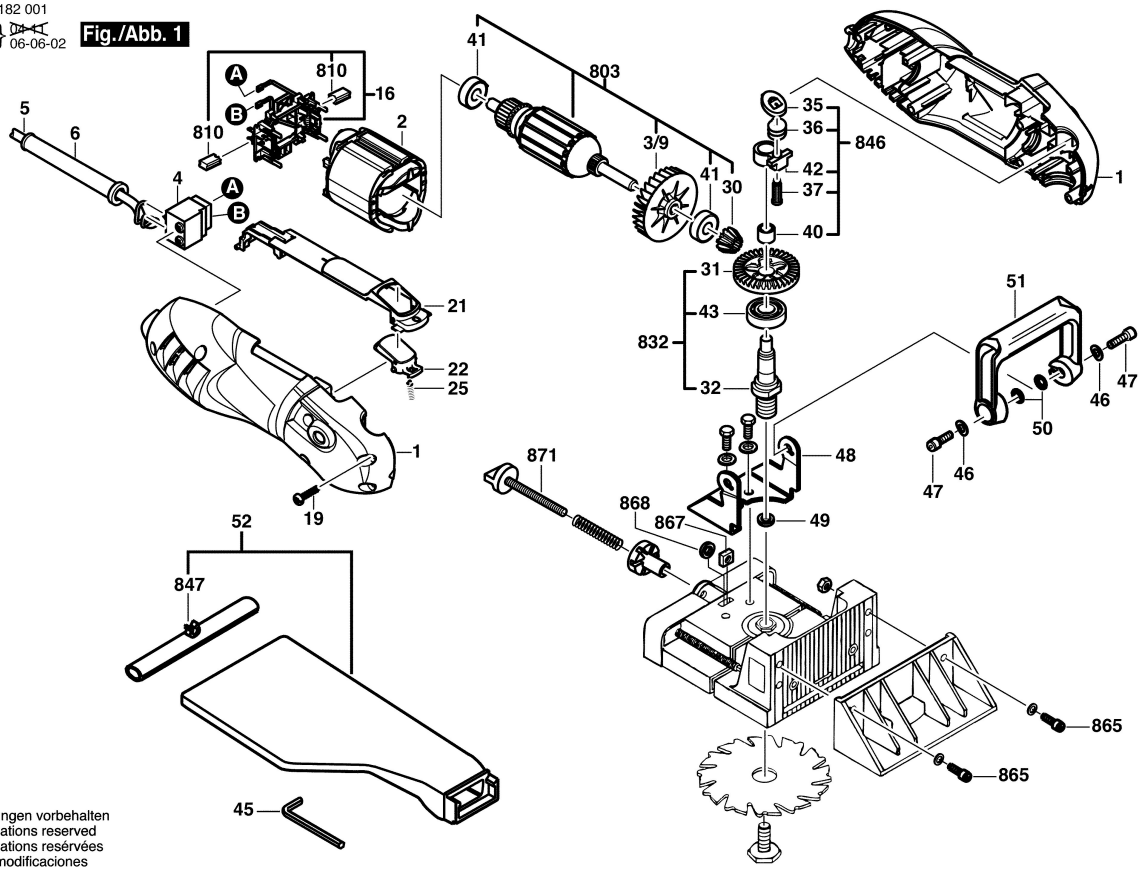

Änderungen vorbehalten
Modifications reserved
Modifications resérvées
Salvo modificaciones