F 015 416 0A1

Stand ~~02-04~~
Issue 03-05-14
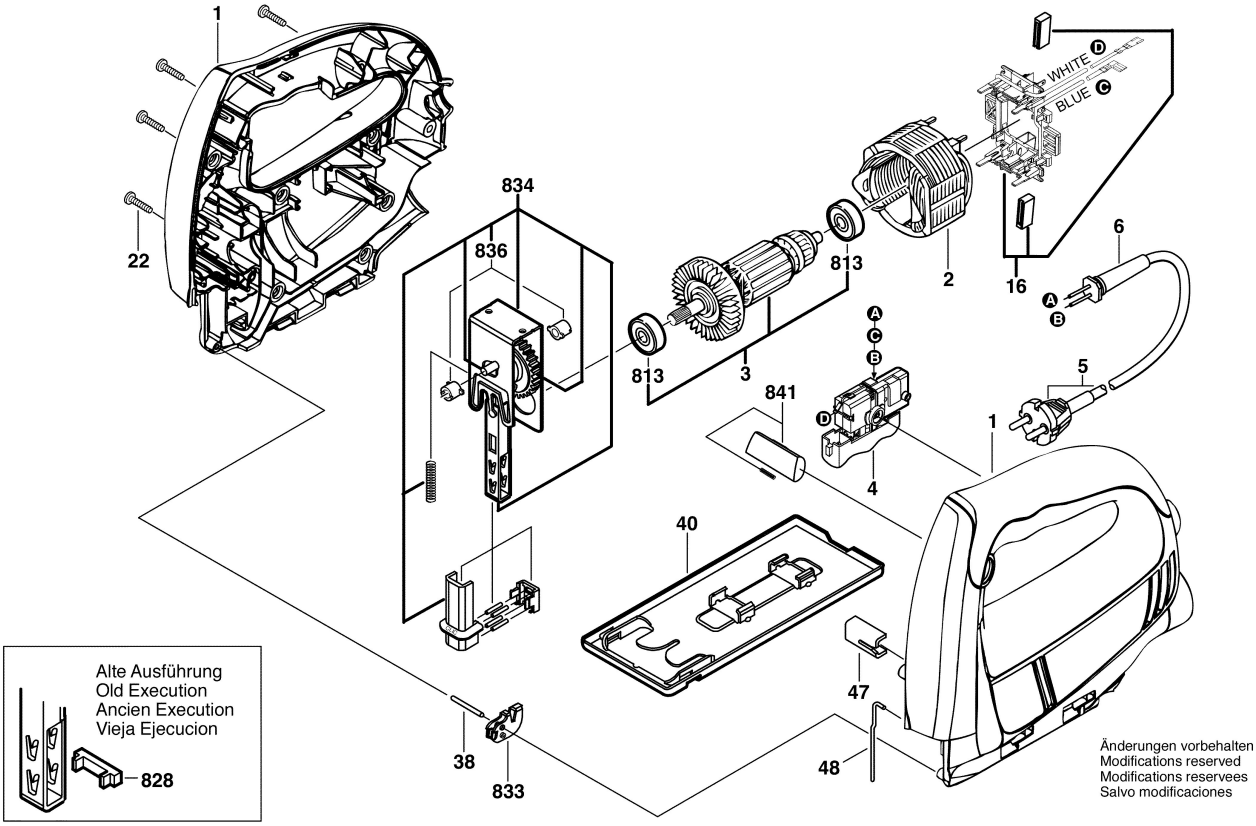
Fig./Abb. 1