F 015 426 0A1
Stand ~~02-04~~
Issue 03-05-14
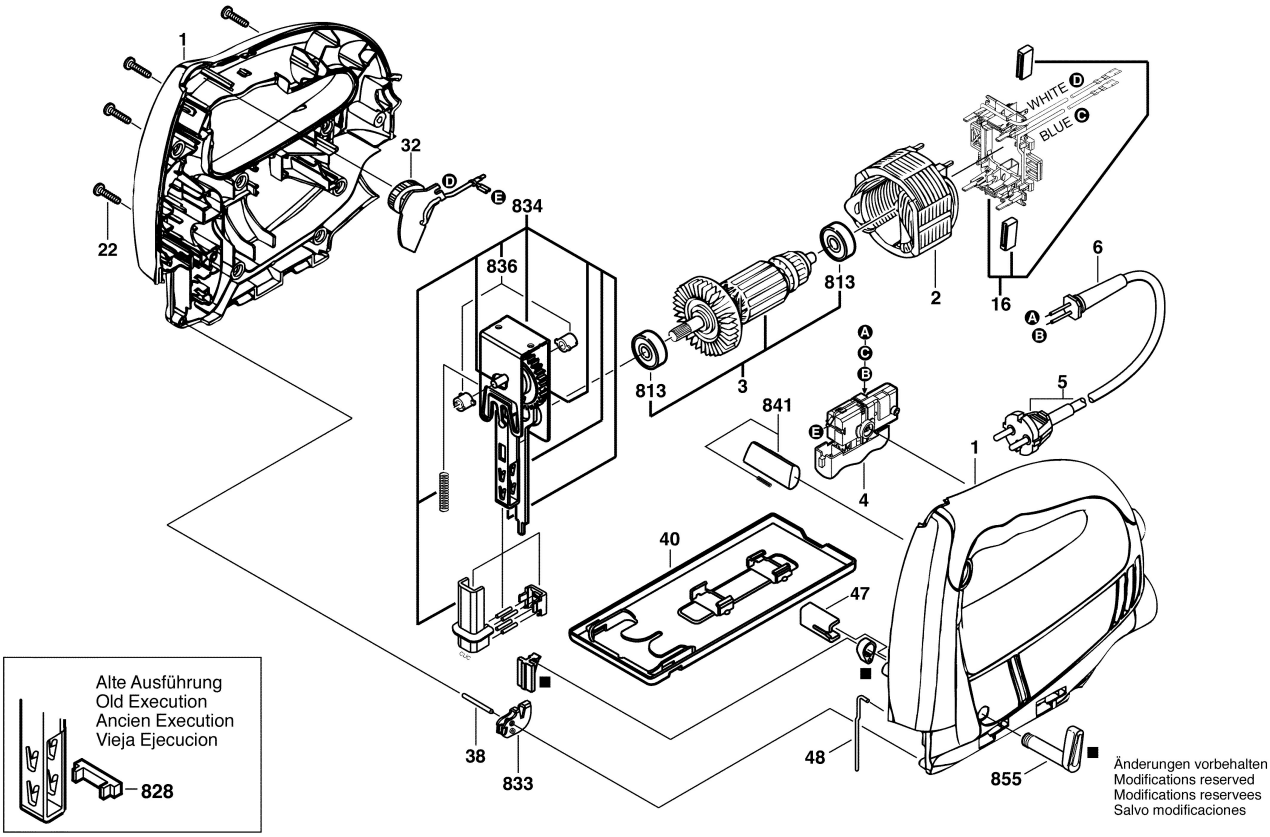
Fig./Abb. 1