F 015 458 001
Stand ~~07-11~~
Issue 11-05-31

Fig./Abb. 1

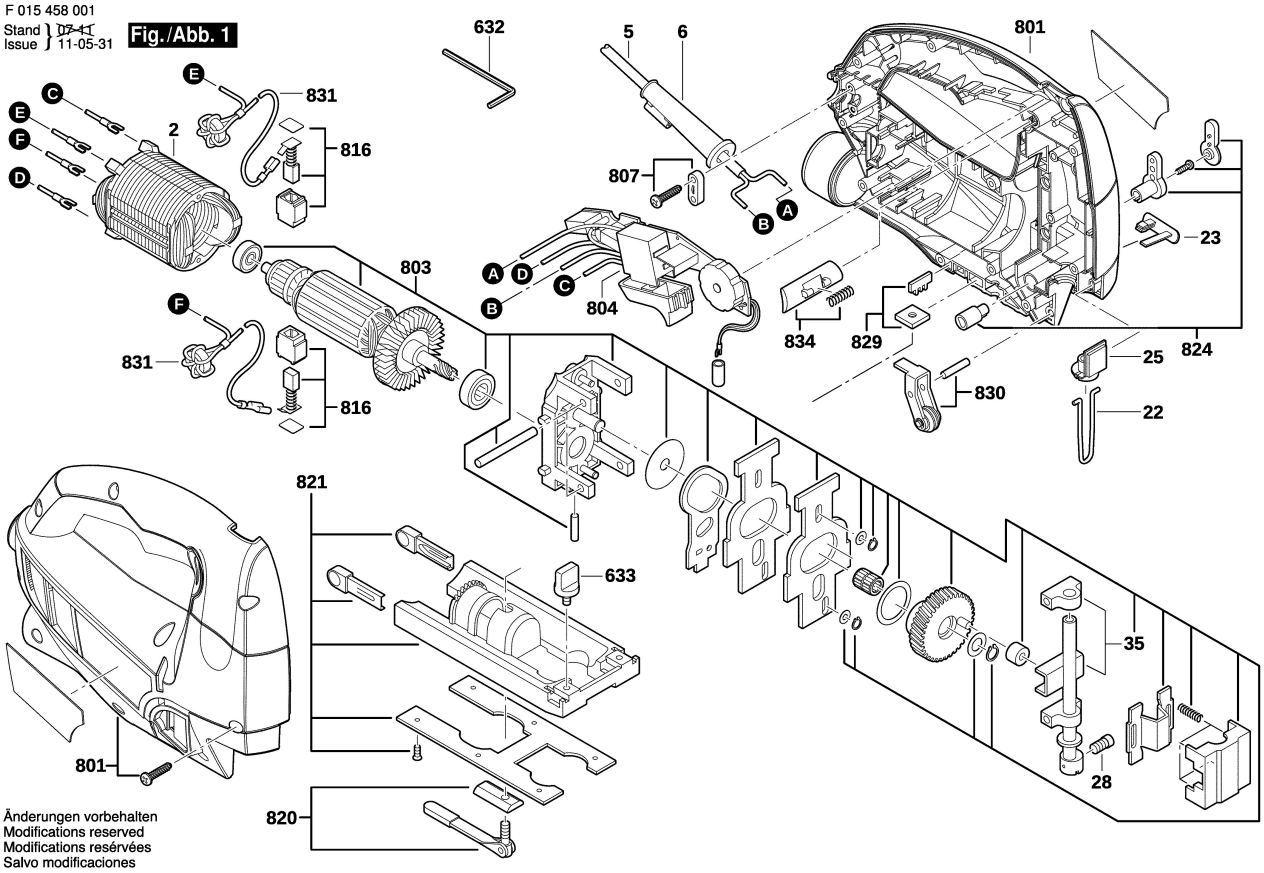

Änderungen vorbehalten
Modifications reserved
Modifications resérvées
Salvo modificaciones