F 015 647 E02
Stand / Issue } 99-05-04
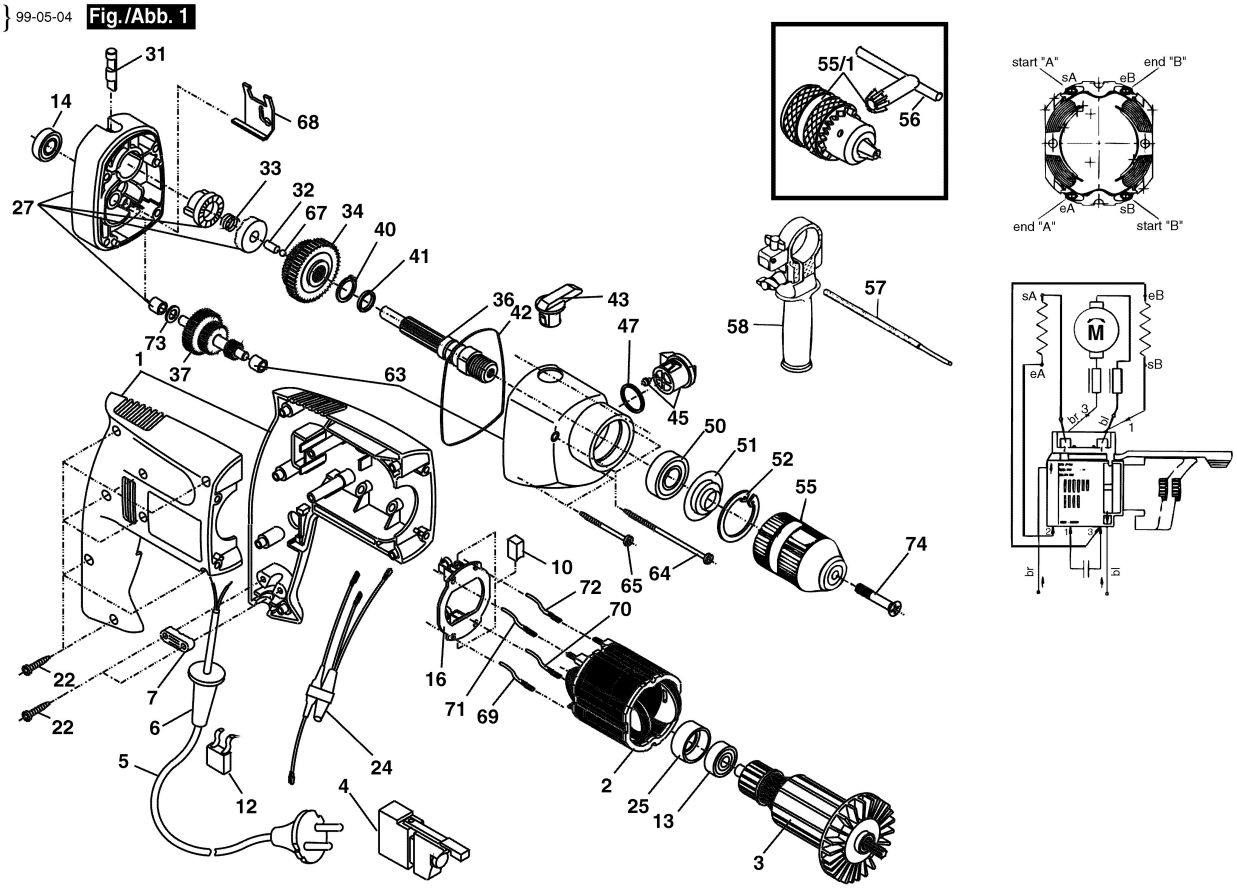
Fig./Abb. 1