F 015 736 101

Stand ~~07-11~~
Issue 08-02-12

Fig./Abb. 1

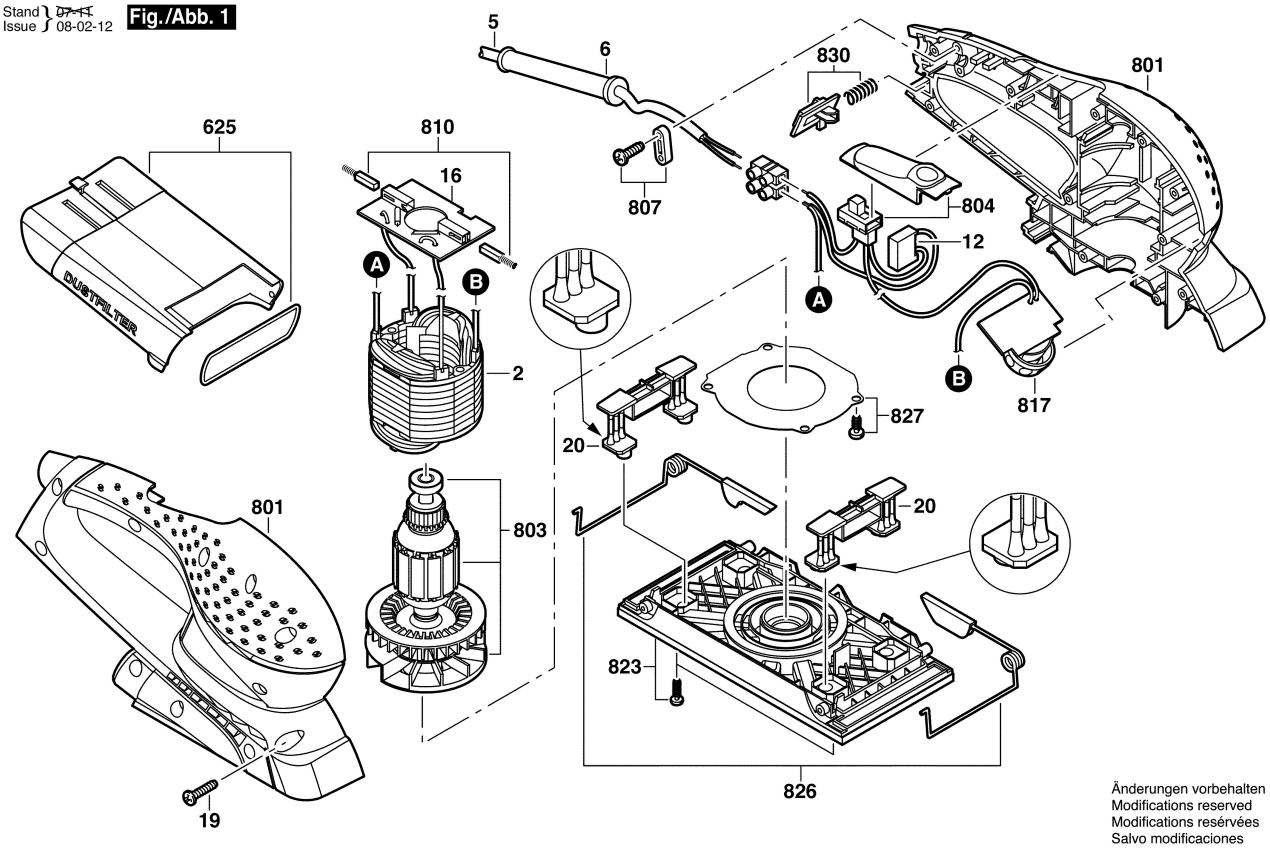

Änderungen vorbehalten
Modifications reserved
Modifications resérvées
Salvo modificaciones