F 015 800 711
Issue / Stand 12-04-16
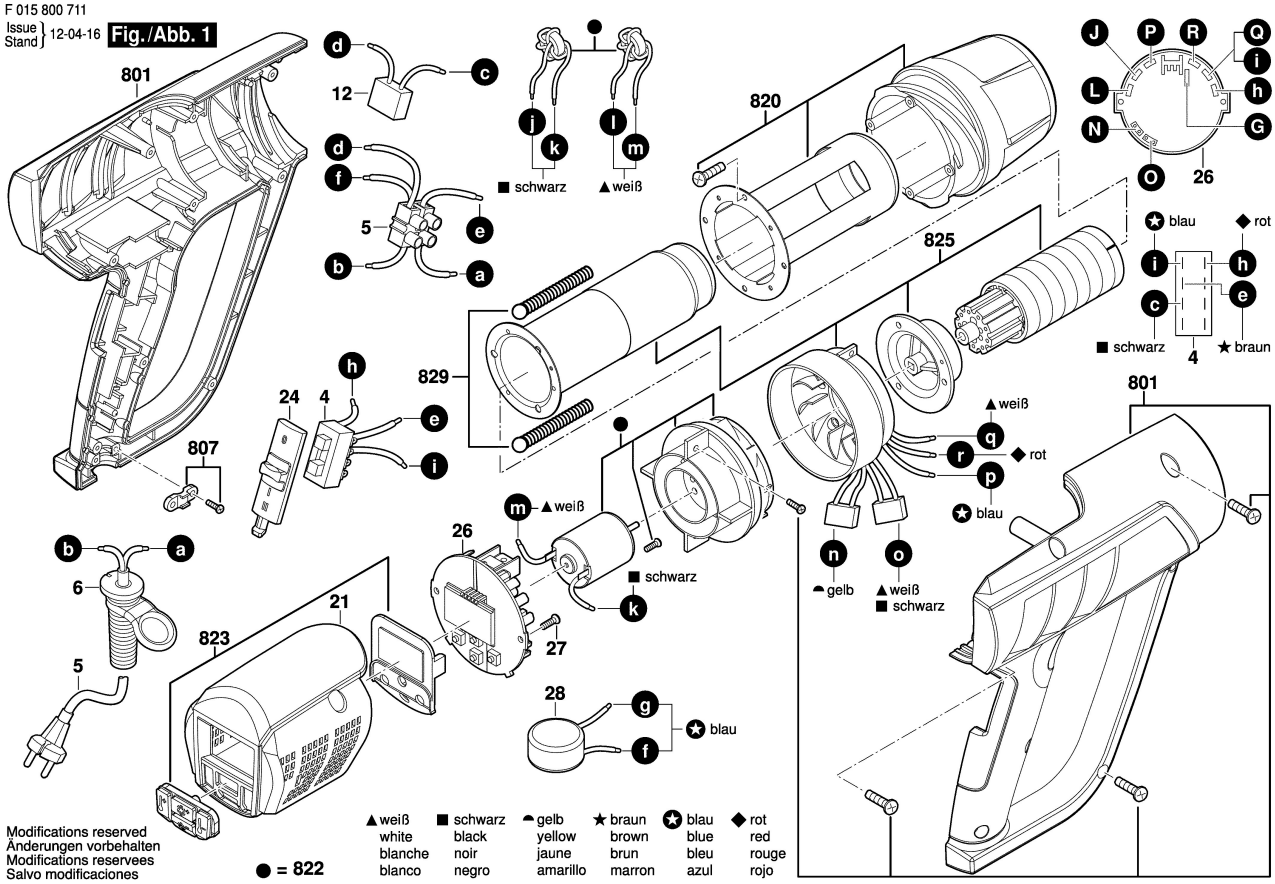
Fig./Abb. 1