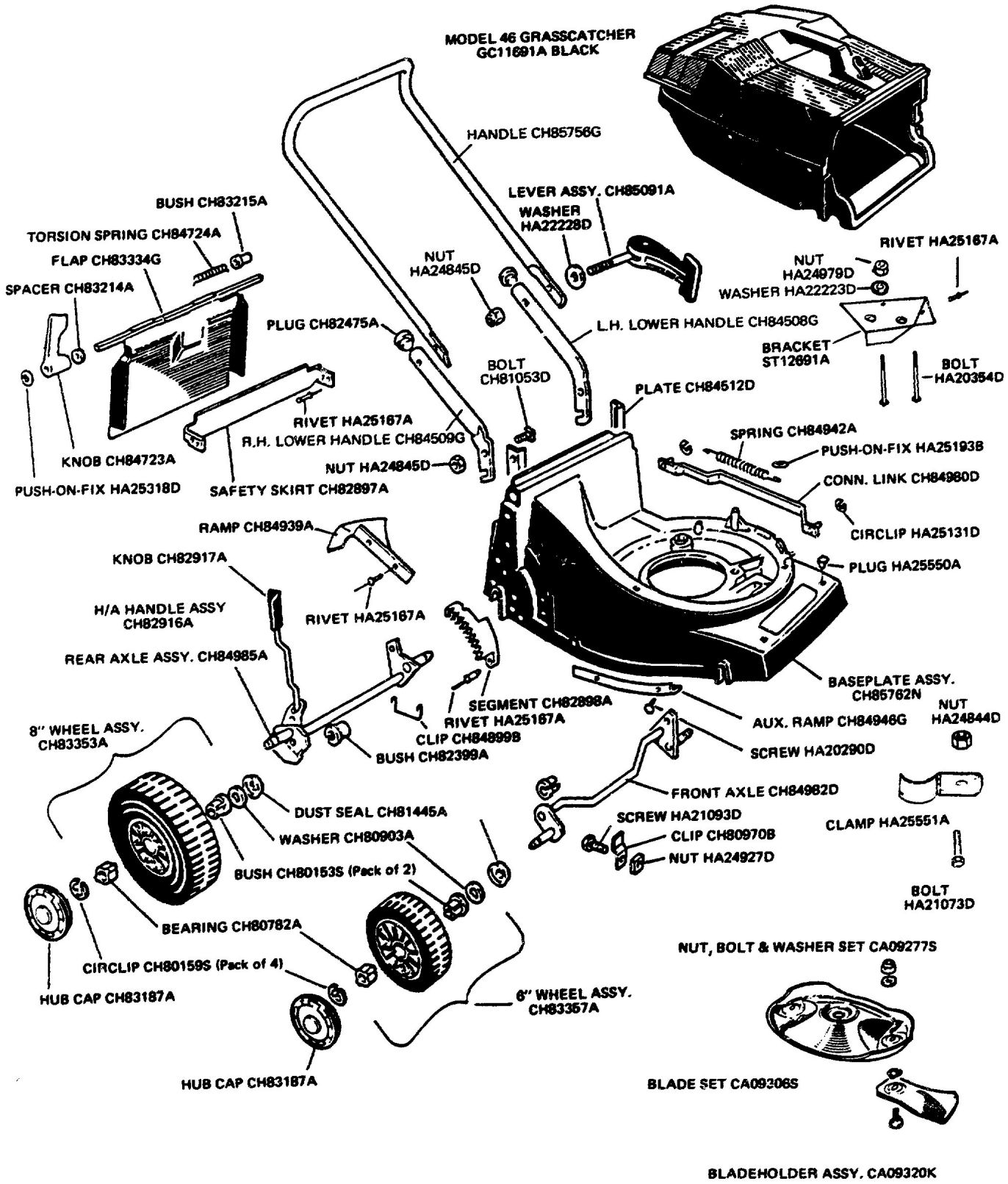
MODEL 46 GRASSCATCHER
GC11691A BLACK
HANDLE CH85756G
LEVER ASSY. CH85091A
WASHER
HA22228D
BUSH CH83215A
TORSION SPRING CH84724A
FLAP CH83334G
SPACER CH83214A
NUT
HA24845D
RIVET HA25167A
NUT
HA24979D
WASHER HA22223D
PLUG CH82475A
L.H. LOWER HANDLE CH84508G
BRACKET
ST12691A
BOLT
HA20354D
BOLT
CH81053D
PLATE CH84512D
RIVET HA25167A
R.H. LOWER HANDLE CH84509G
SPRING CH84942A
PUSH-ON-FIX HA25193B
KNOB CH84723A
NUT HA24845D
CONN. LINK CH84980D
PUSH-ON-FIX HA25318D
SAFETY SKIRT CH82897A
CIRCLIP HA25131D
RAMP CH84939A
PLUG HA25550A
KNOB CH82917A
H/A HANDLE ASSY
CH82916A
RIVET HA25167A
REAR AXLE ASSY. CH84985A
BASEPLATE ASSY.
CH85762N
SEGMENT CH82898A
RIVET HA25167A
AUX. RAMP CH84946G
NUT
HA24844D
8" WHEEL ASSY.
CH83353A
CLIP CH84899B
BUSH CH82399A
SCREW HA20290D
FRONT AXLE CH84982D
DUST SEAL CH81445A
SCREW HA21093D
CLAMP HA25551A
WASHER CH80903A
CLIP CH80970B
NUT HA24927D
BUSH CH80153S (Pack of 2)
BOLT
HA21073D
BEARING CH80782A
NUT, BOLT & WASHER SET CA09277S
CIRCLIP CH80159S (Pack of 4)
HUB CAP CH83187A
6" WHEEL ASSY.
CH83357A
HUB CAP CH83187A
BLADE SET CA09206S
BLADEHOLDER ASSY. CA09320K