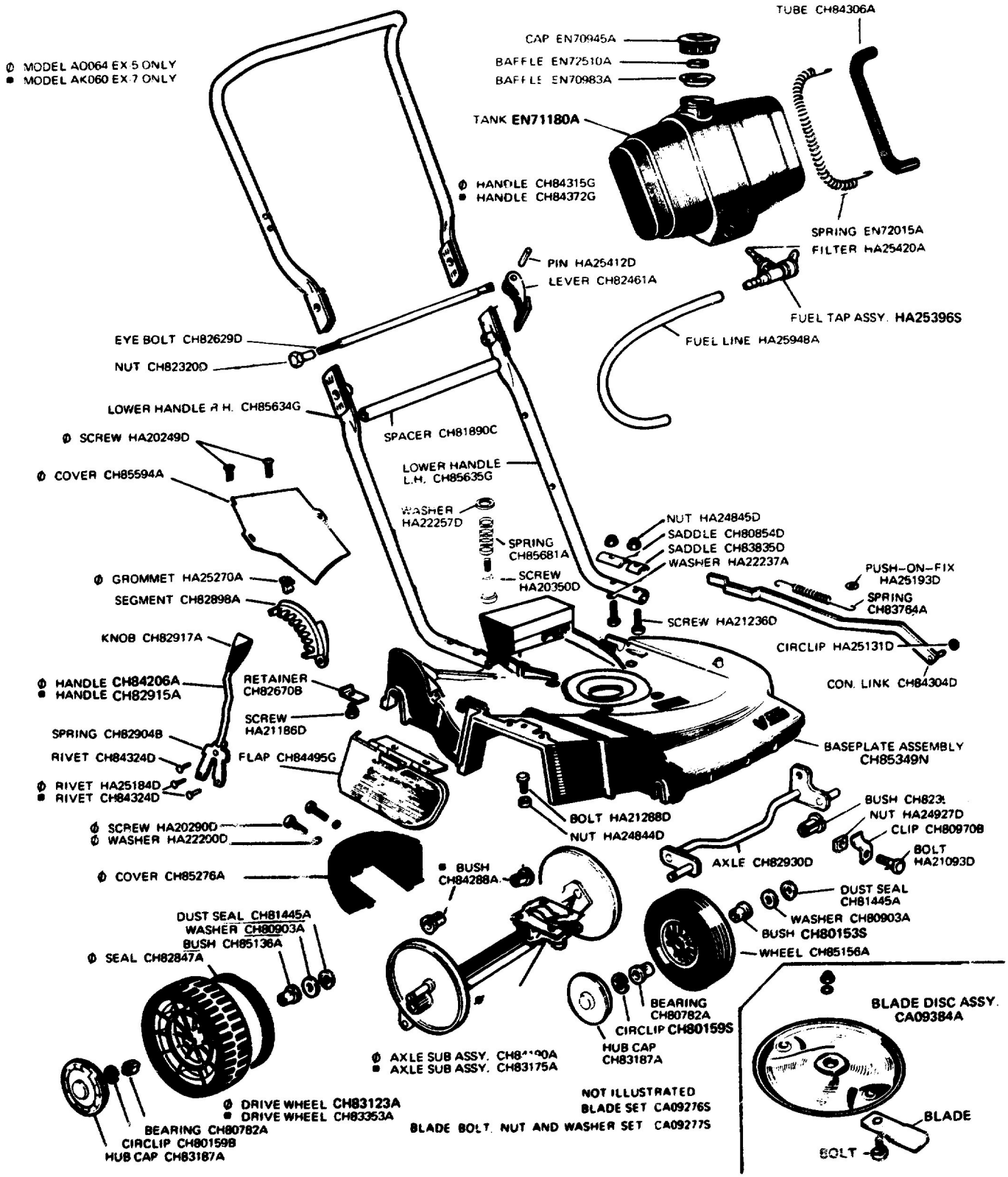
Ø MODEL AO064 EX 5 ONLY
■ MODEL AK060 EX 7 ONLY
TUBE CH84306A
CAP EN70945A
BAFFLE EN72510A
BAFFLE EN70983A
TANK EN71180A
Ø HANDLE CH84315G
■ HANDLE CH84372G
SPRING EN72015A
FILTER HA25420A
PIN HA25412D
LEVER CH82461A
FUEL TAP ASSY. HA25396S
FUEL LINE HA25948A
EYE BOLT CH82629D
NUT CH82320D
LOWER HANDLE R.H. CH85634G
SPACER CH81890C
Ø SCREW HA20249D
Ø COVER CH85594A
LOWER HANDLE L.H. CH85635G
WASHER HA22257D
SPRING CH85681A
SCREW HA20350D
NUT HA24845D
SADDLE CH80854D
SADDLE CH83835D
WASHER HA22237A
PUSH-ON-FIX HA25193D
SPRING CH83764A
Ø GROMMET HA25270A
SEGMENT CH82898A
SCREW HA21236D
CIRCLIP HA25131D
CON. LINK CH84304D
KNOB CH82917A
Ø HANDLE CH84206A
■ HANDLE CH82915A
RETAINER CH82670B
SCREW HA21186D
SPRING CH82904B
RIVET CH84324D
FLAP CH84495G
BASEPLATE ASSEMBLY CH85349N
Ø RIVET HA25184D
■ RIVET CH84324D
BOLT HA21288D
NUT HA24844D
BUSH CH823
NUT HA24927D
CLIP CH809708
BOLT HA21093D
Ø SCREW HA20290D
Ø WASHER HA22200D
AXLE CH82930D
Ø COVER CH85276A
■ BUSH CH84288A
DUST SEAL CH81445A
WASHER CH80903A
BUSH CH80153S
WHEEL CH85156A
DUST SEAL CH81445A
WASHER CH80903A
BUSH CH85136A
Ø SEAL CH82847A
BEARING CH80782A
CIRCLIP CH80159S
HUB CAP CH83187A
BLADE DISC ASSY. CA09384A
Ø AXLE SUB ASSY. CH8
■ AXLE SUB ASSY. CH83175A
NOT ILLUSTRATED
BLADE SET CA09276S
BLADE BOLT, NUT AND WASHER SET CA09277S
Ø DRIVE WHEEL CH83123A
■ DRIVE WHEEL CH83353A
BEARING CH80782A
CIRCLIP CH80159B
HUB CAP CH83187A
BLADE
BOLT