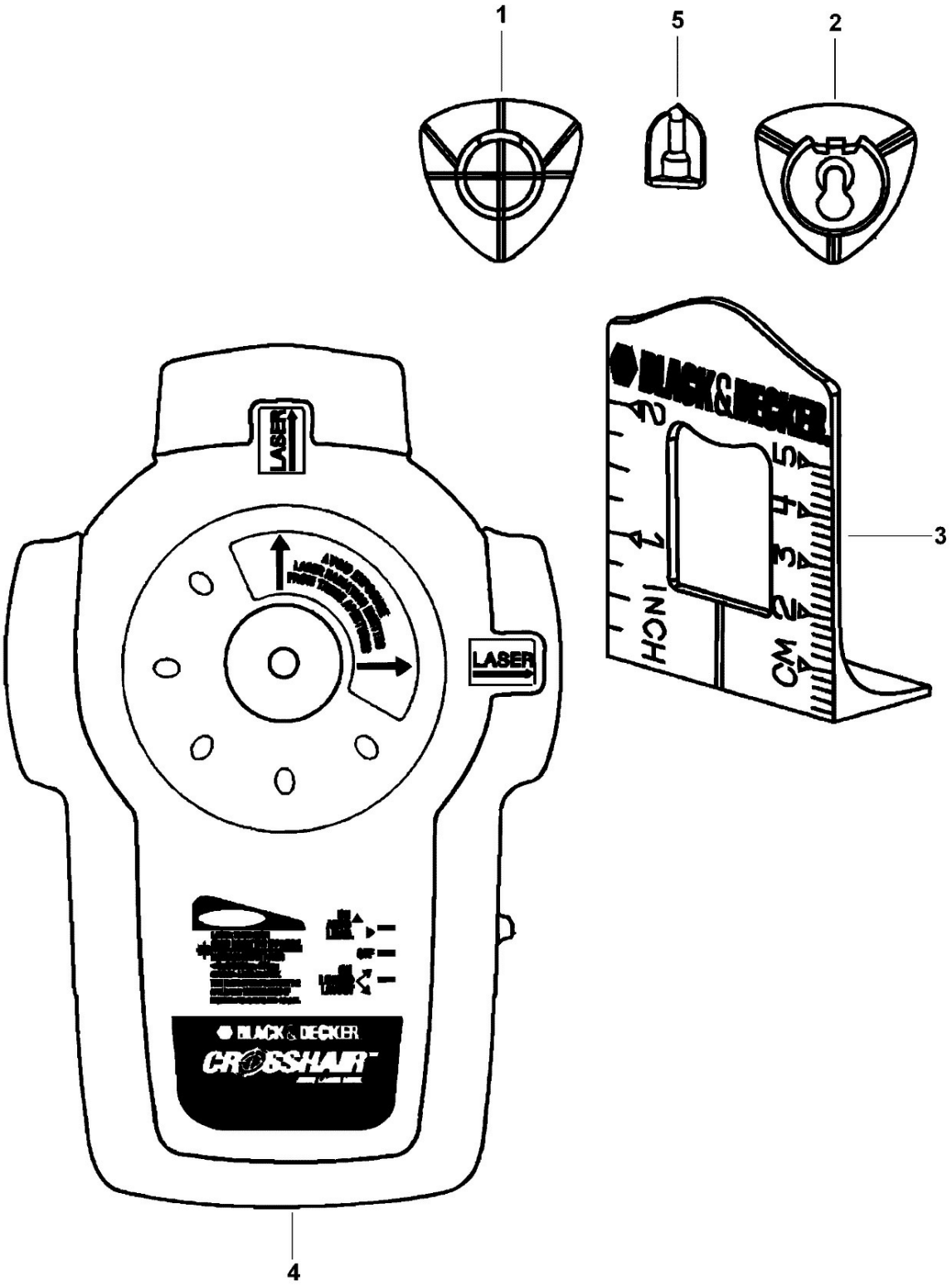
1
5
2
3
4
LASER
LASER
BLACK & DECKER
CROSSHAIR
BLACK & DECKER
INCH
CM

©