MH 534 RV

A1992-3312-01

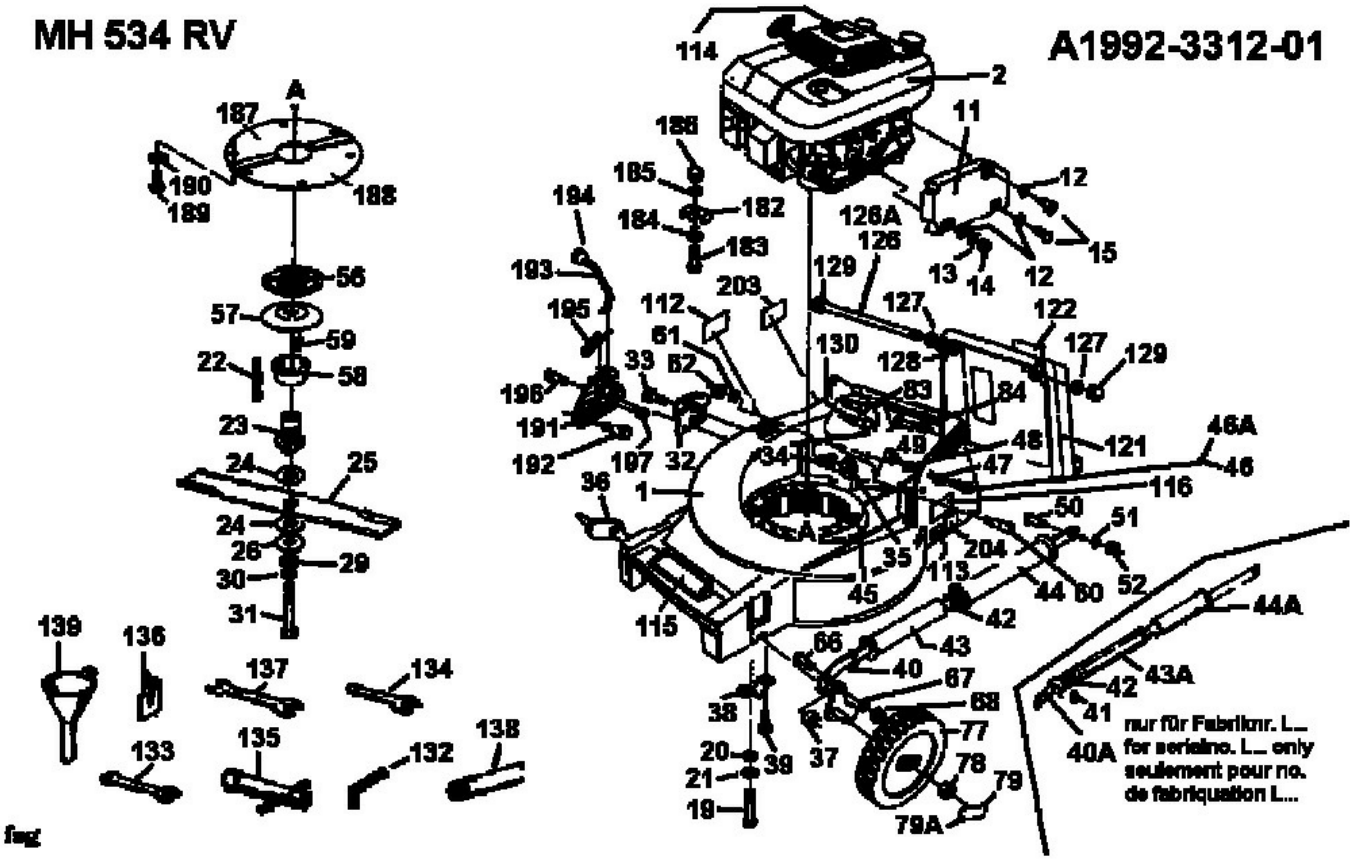

fsg