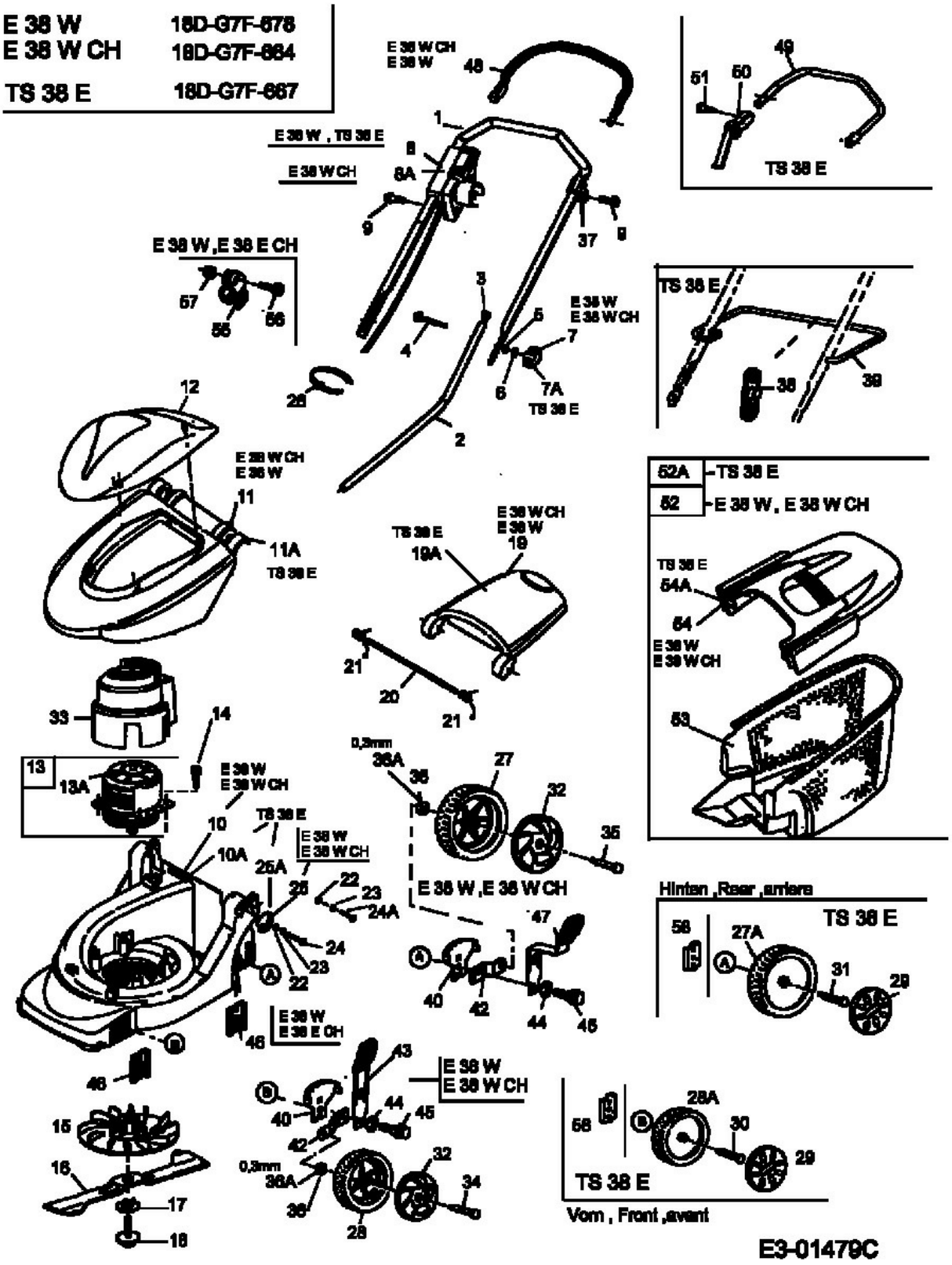E 38 W	18D-G7F-678
E 38 W CH	18D-G7F-684
TS 38 E	18D-G7F-687