YM 6018 SPS

12BS698I643

HB 46 RSLS

12BS698I690

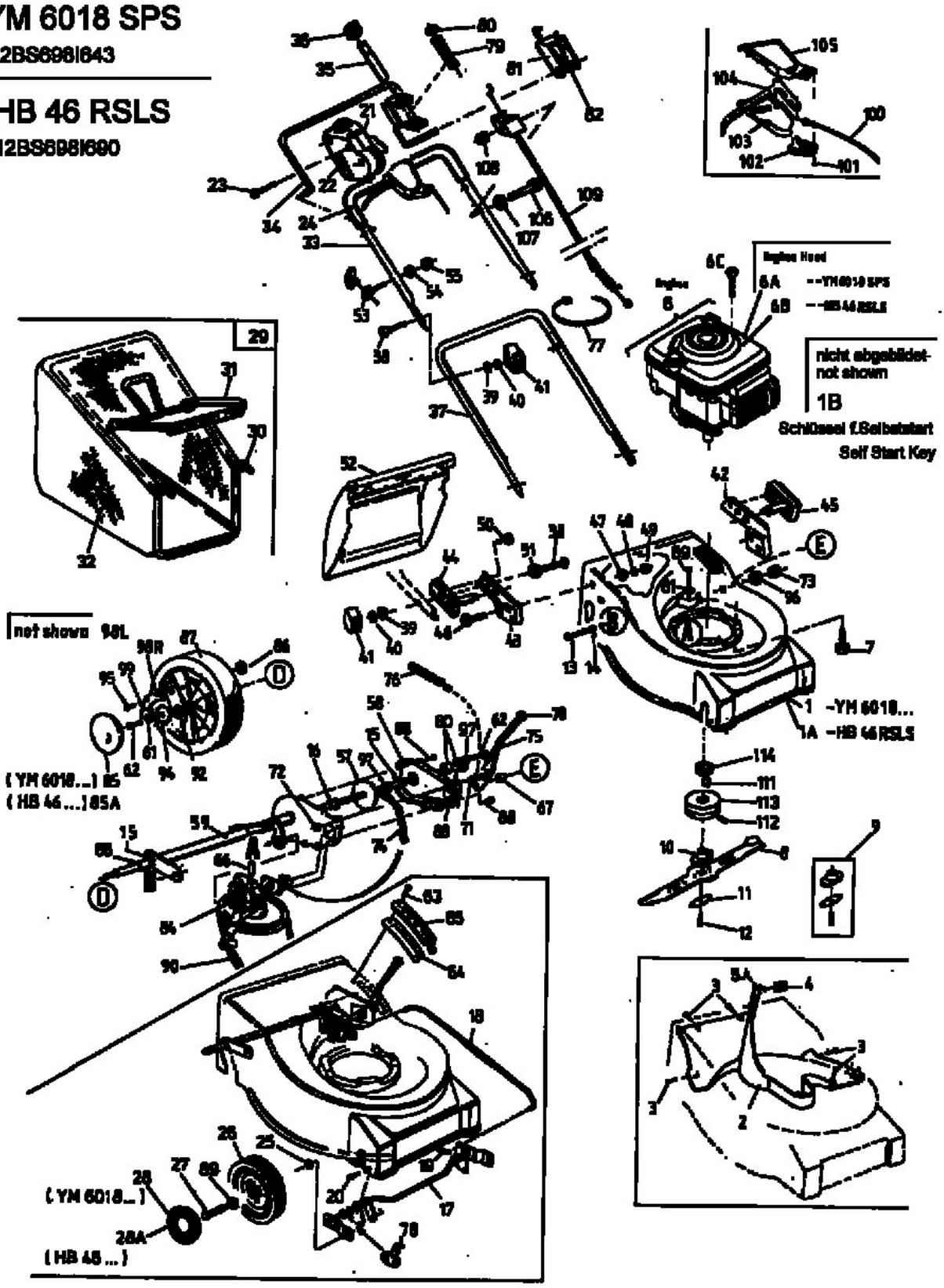

E3-01548C