32-9E	18A-E0C-600	32-10E	18A-E0D-600
32-9E	18A-E0C-602	FF-328	18A-E0D-665
32-9E CH	18A-E0C-664	3210	18B-E0D-689

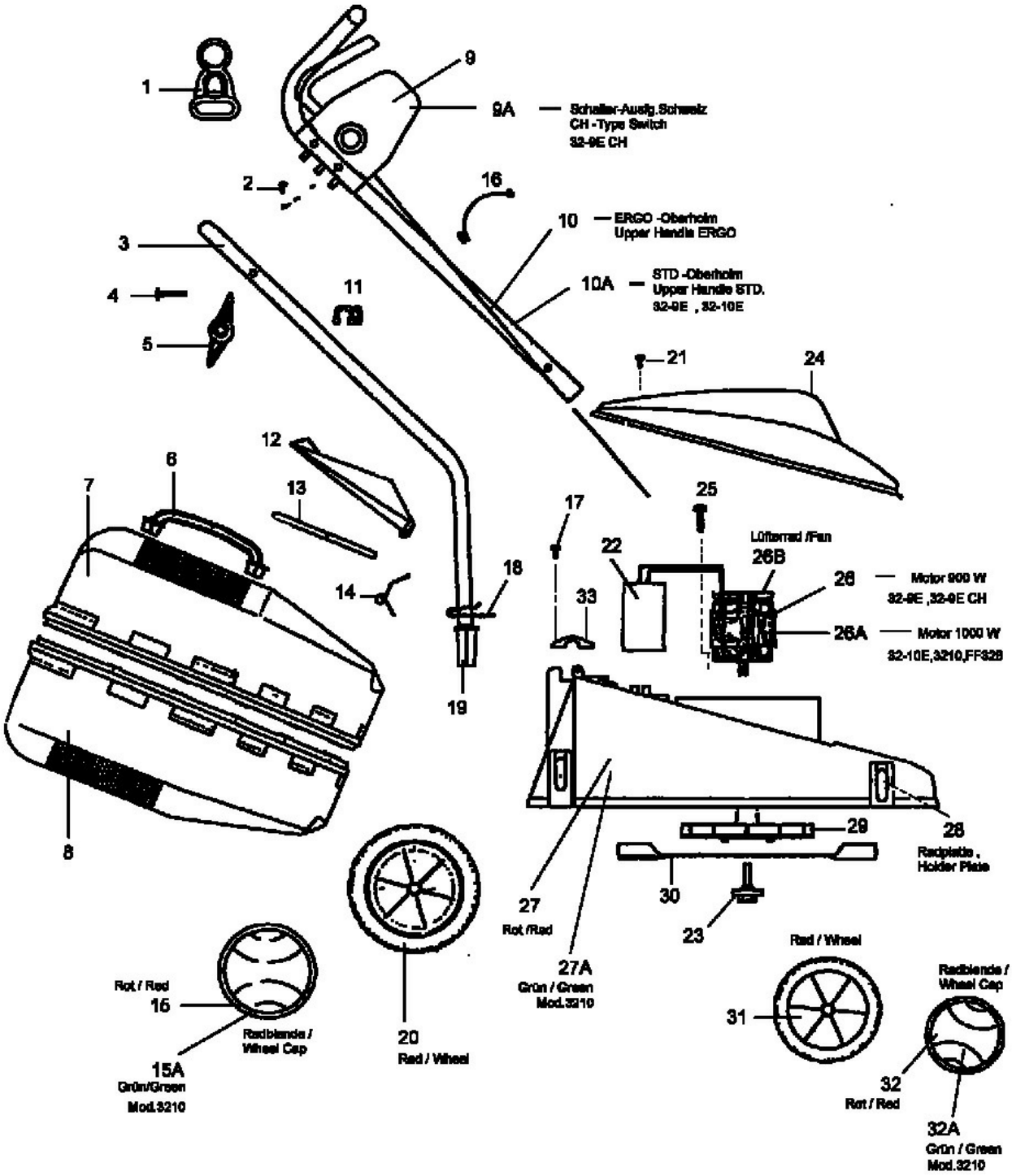

E3-01595D