HB 48 LS	11D-T48R890
YM 5018 P	11D-T48R843
GE 45 H	11D-T48S878
TS 45 BB	11D-T44H867

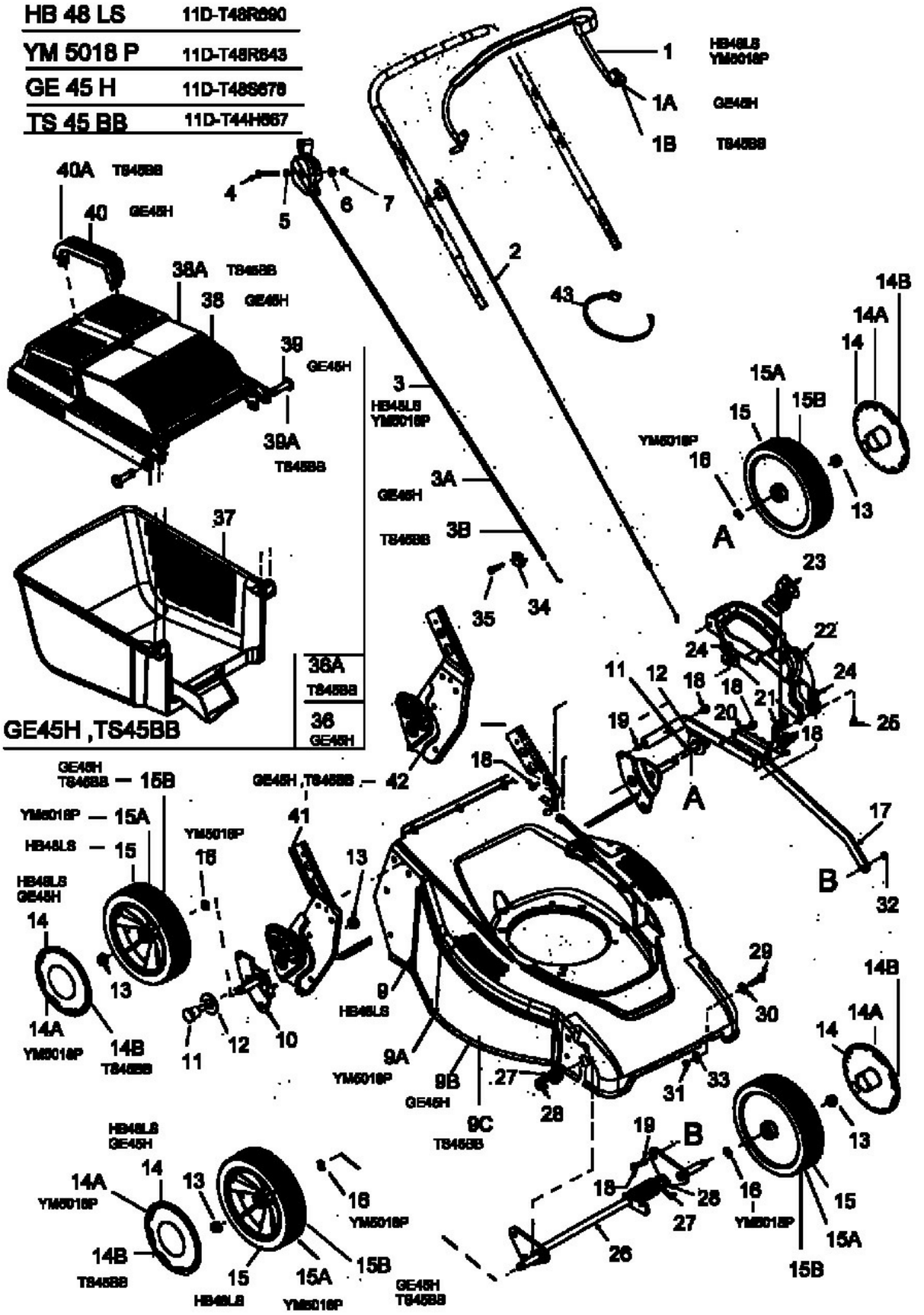

E3-01923A