HB 45 LS	11D-T48R690
YM 5018 P	11D-T48R643
GE 45 H	11D-T48S578
TS 45 BB	11D-T44M657

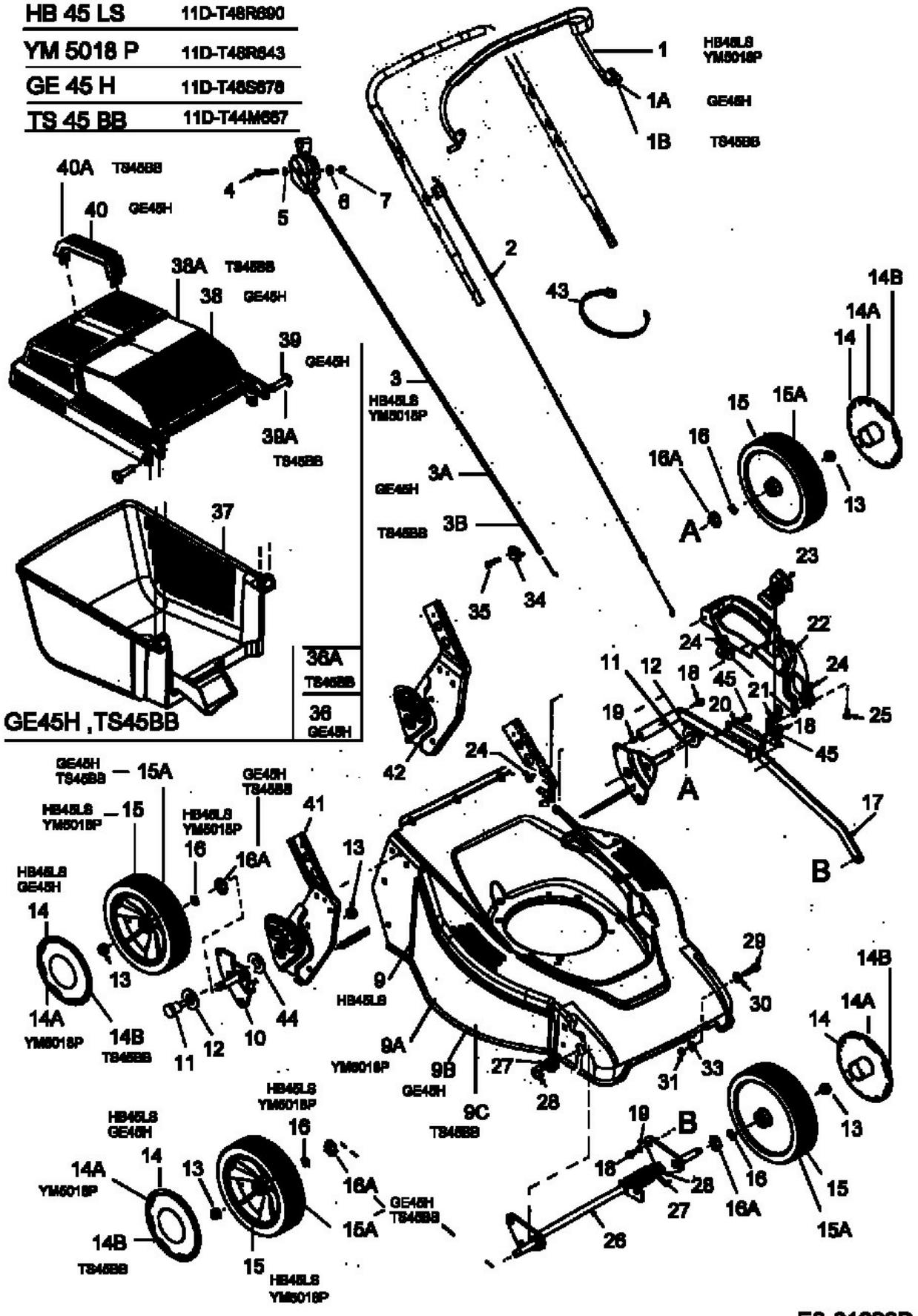

E3-01923B