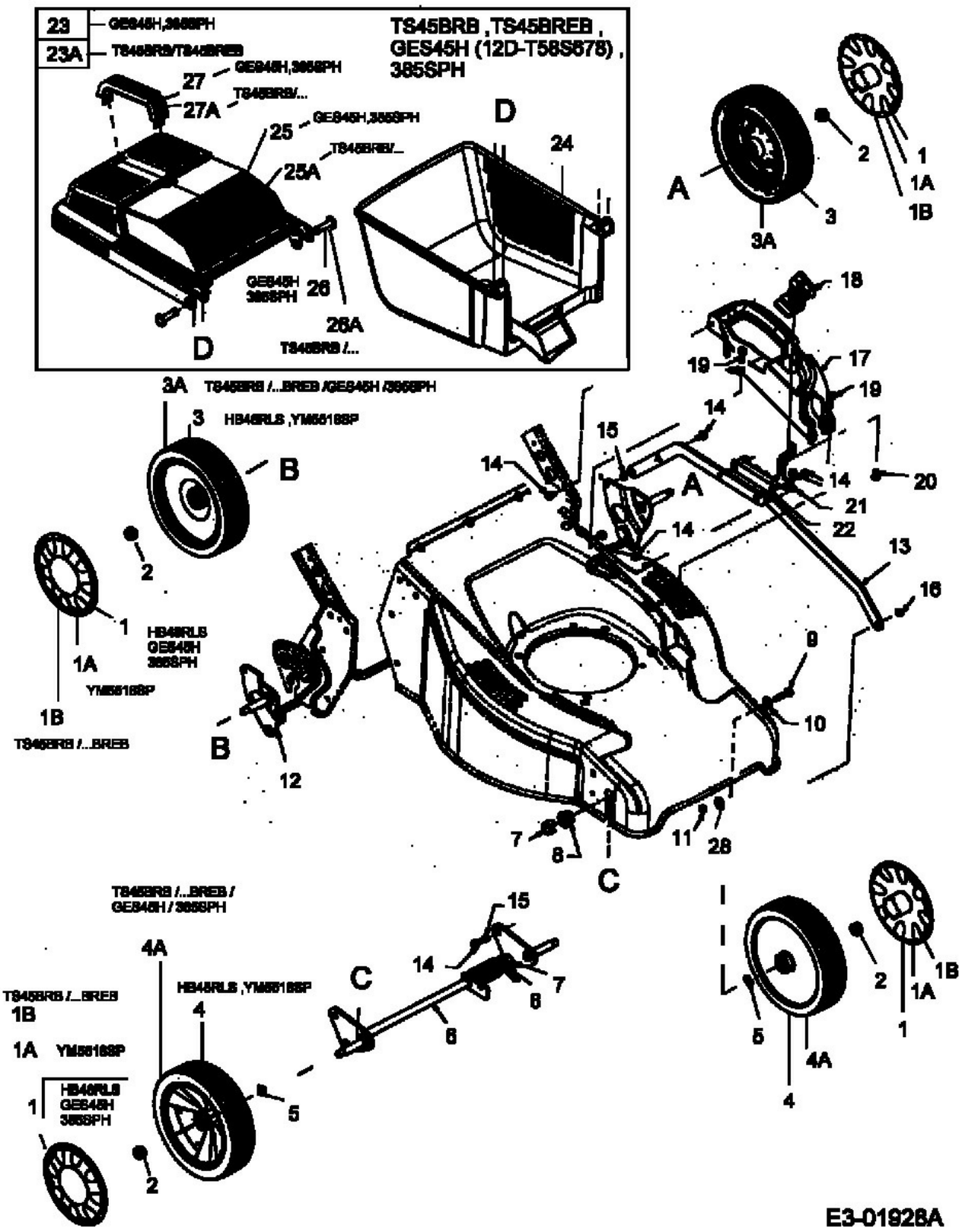HB 48 RLS	12D-T58P690	YM 5518 SP	12D-T58P643
TS45 BRB	12D-T58R667	GES45 H	12D-T58S678 /...678
TS45 BREB	12DET58V667	385 SPH	12D-T46S611