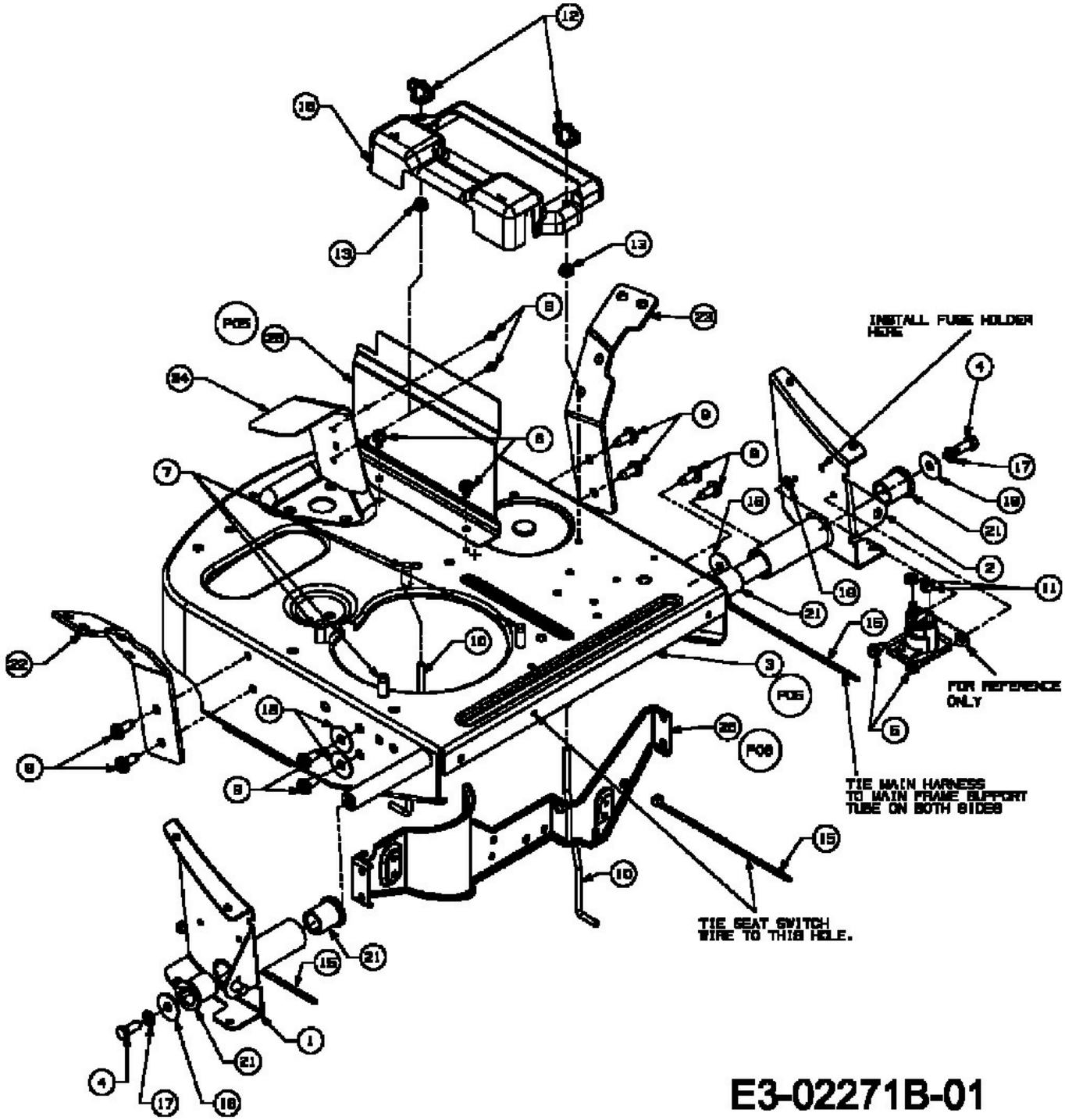
INSTALL FUSE HOLDER HERE
FOR REFERENCE ONLY
TIE MAIN HARNESS TO MAIN FRAME SUPPORT TUBE ON BOTH SIDES
TIE SEAT SWITCH WIRE TO THIS HOLE.
E3-02271B-01