46 PB	11A-J10G800	OK 46 PB	11A-J10G867
46 PB	11A-J10G804	46 PT	11A-J11A835
BBM 46 BS	11A-J10G619	GBR 46	11A-J14M666
BBM 46	11A-J11A619	46 PHM	11A-J1AQ678

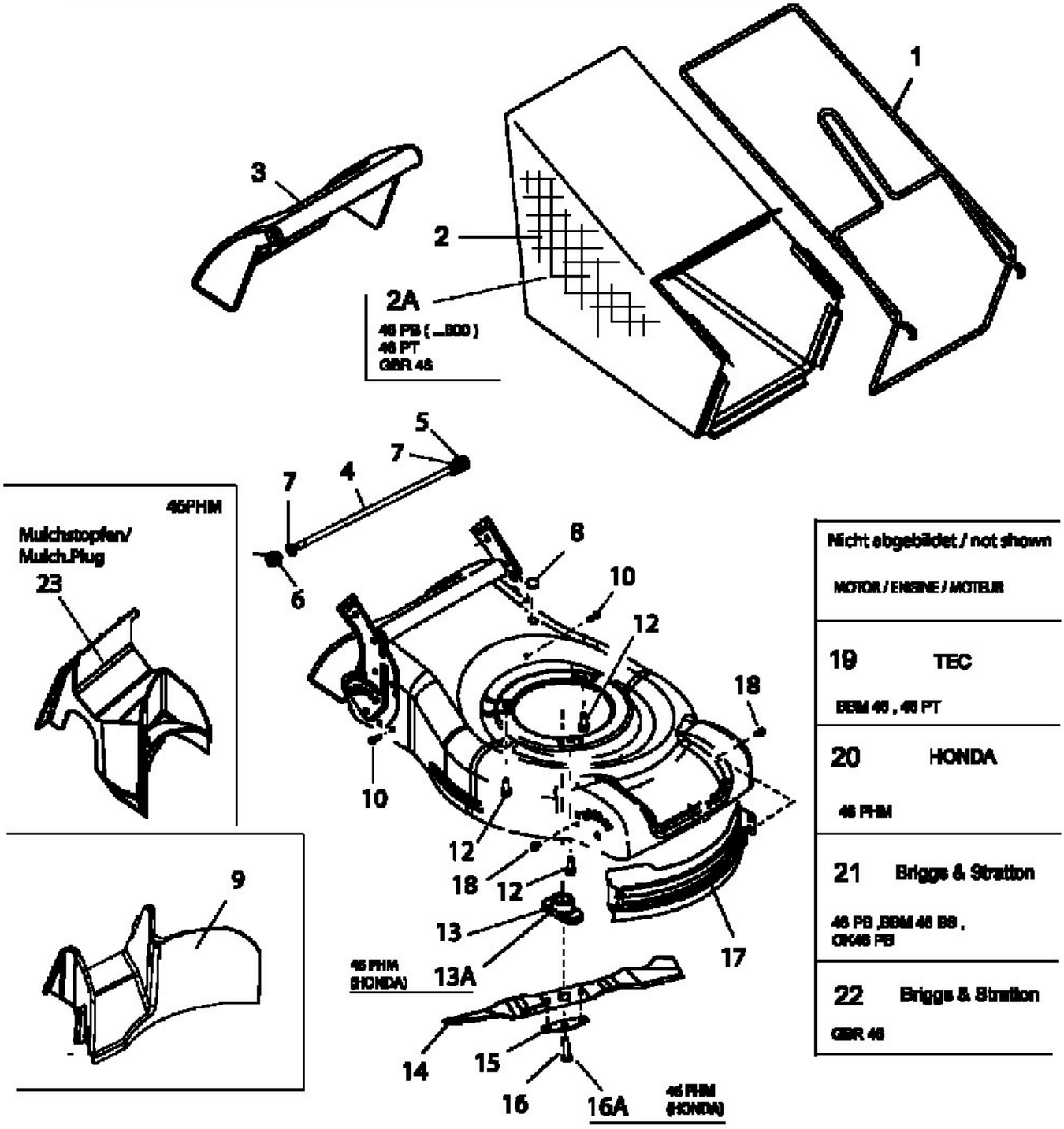

E3-02606A