40PO	11B-I1ML600
NO 40TO35	11B-I1ML693
Mastercut P40 O	11B-I1MD657
4035 PO	11B-I1MD662
BL 4040 P	11B-I1ME684
40PB	11B-I10G600
GBR40	11B-I10G666

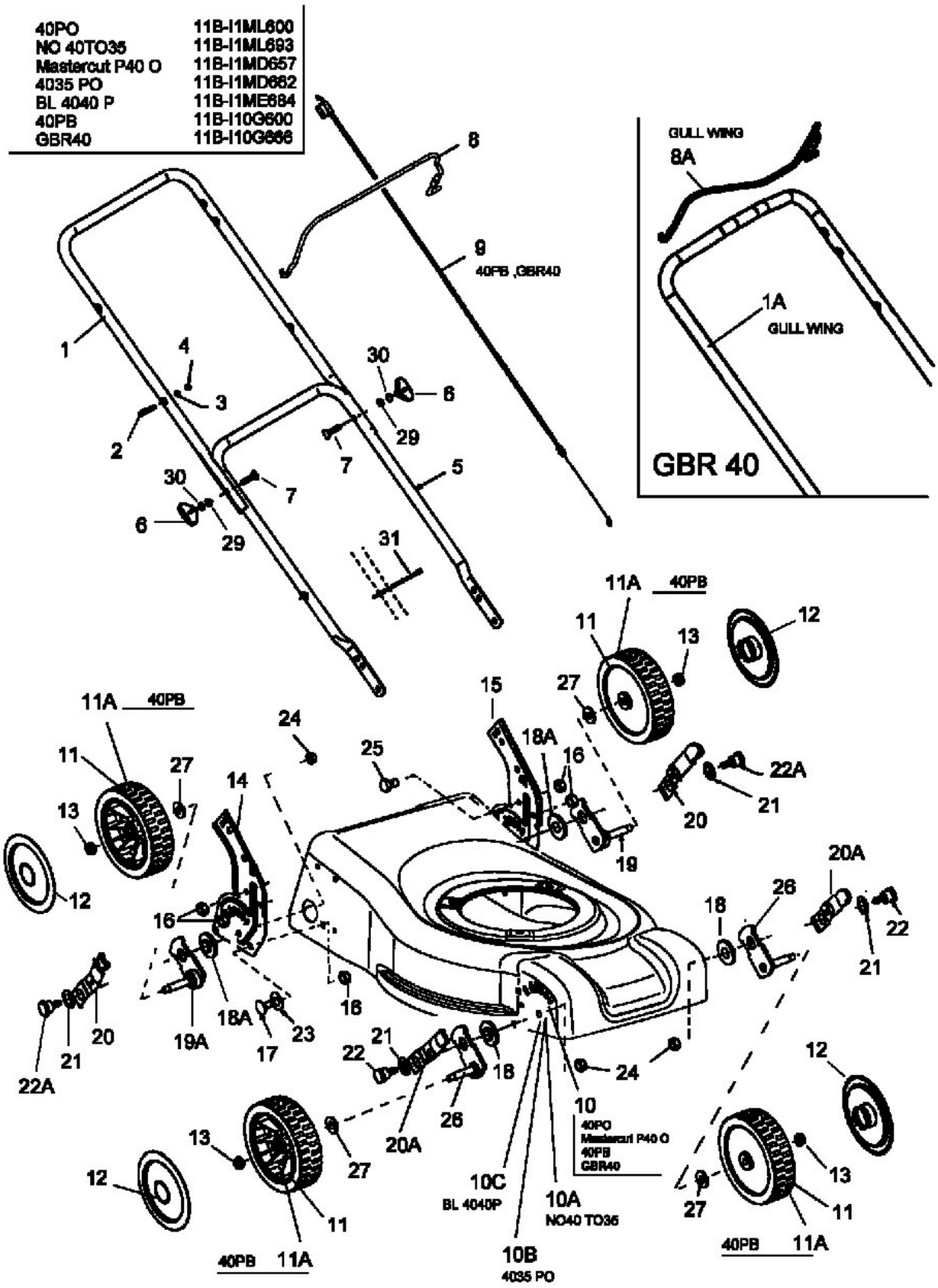

E3-03337A-01