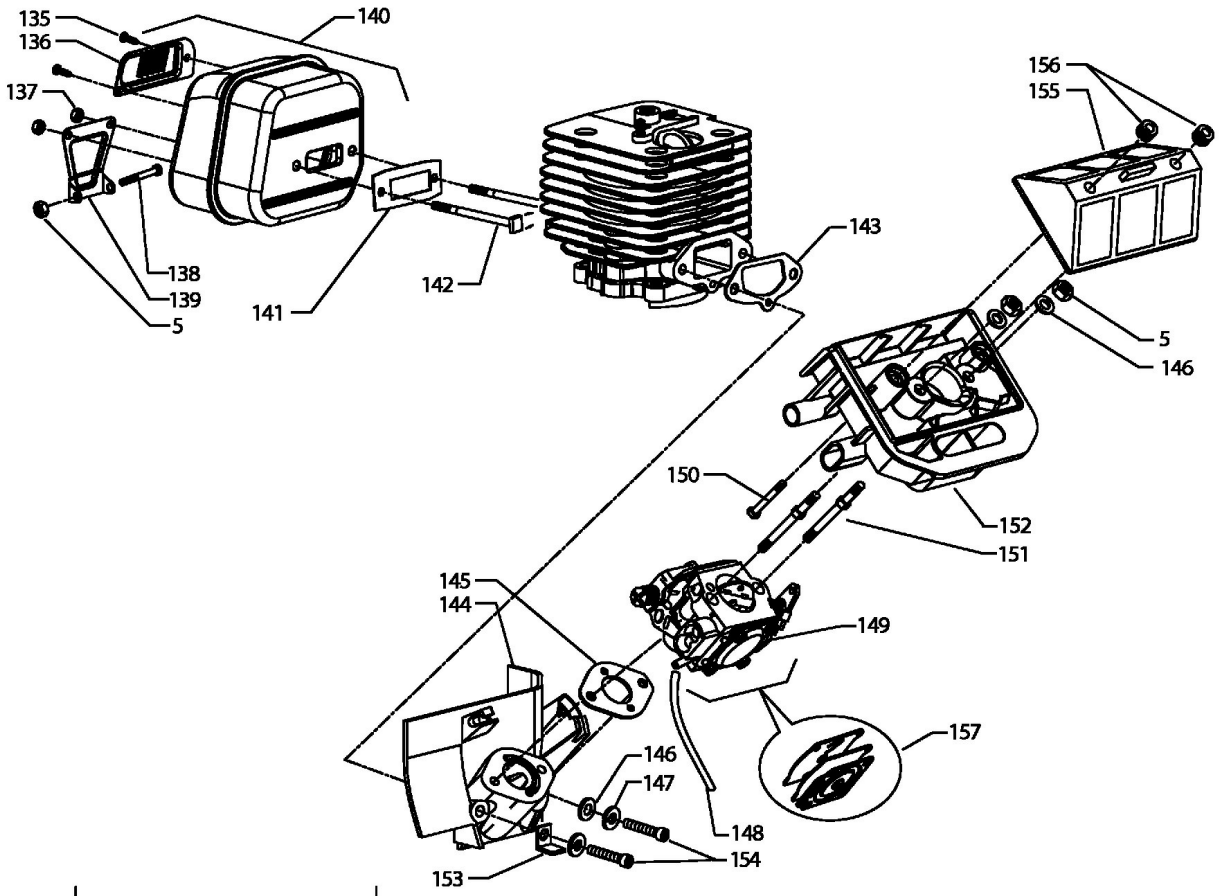


| GCS 46/40 C |
|---|
| 41AC4640678<br>41AY4640678 |
| **GCS 46/45 C** |
| 41AY4340678 |

E3-03712A-01