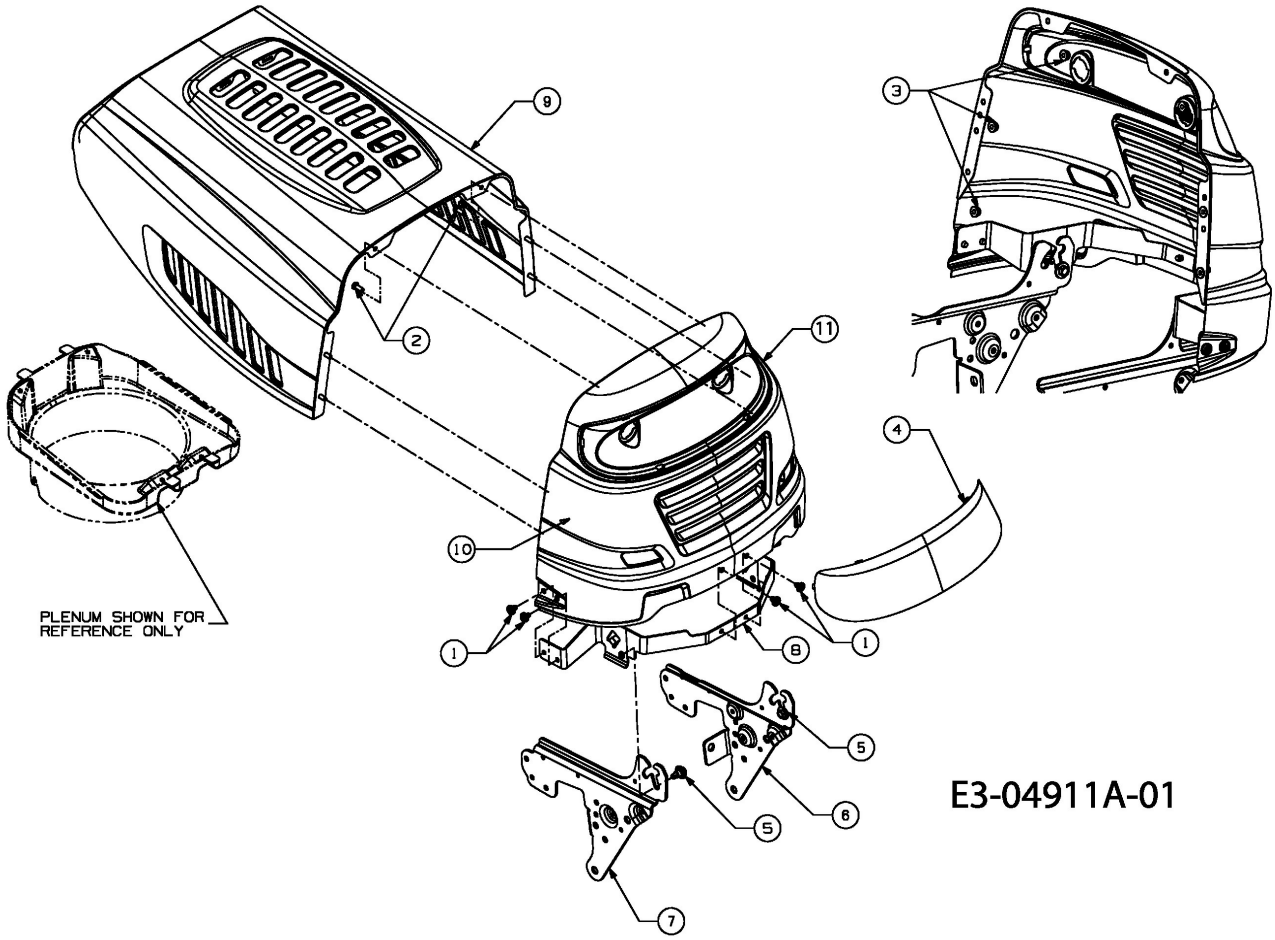
9
3
2
11
4
10
PLENUM SHOWN FOR
REFERENCE ONLY
1
8
1
5
6
5
7
E3-04911A-01