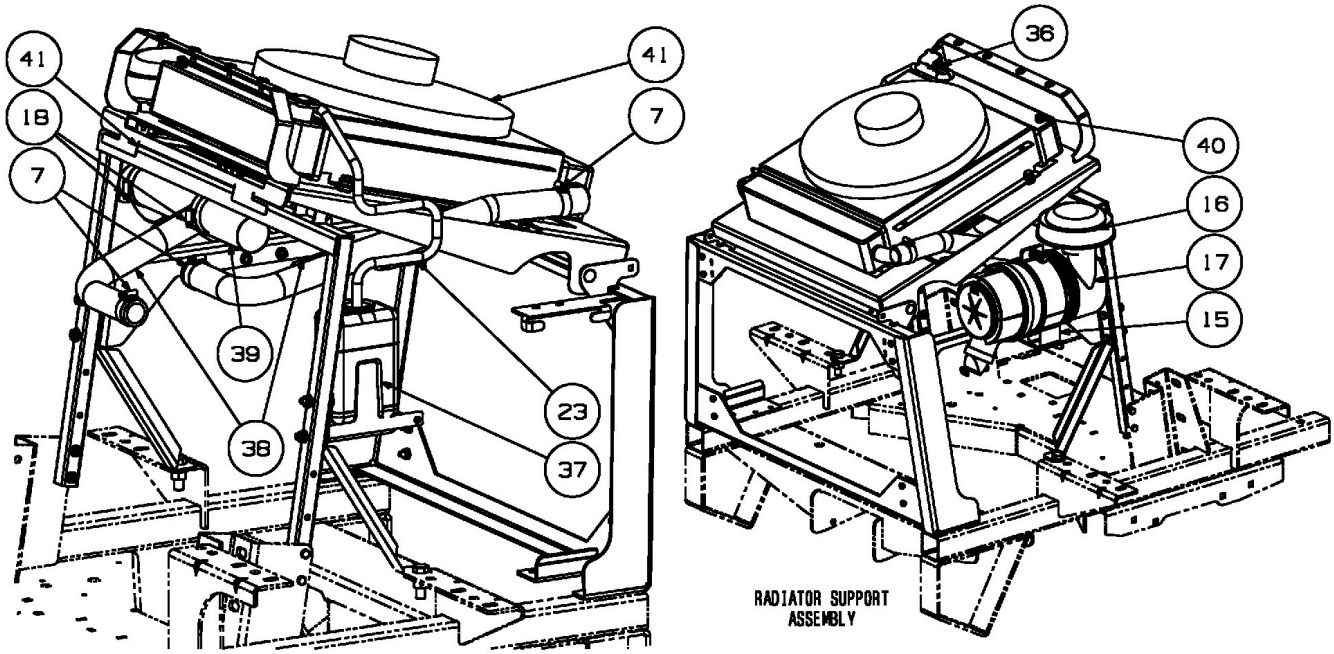
41
18
7
41
7
39
38
23
37
36
40
16
17
15
RADIATOR SUPPORT
ASSEMBLY

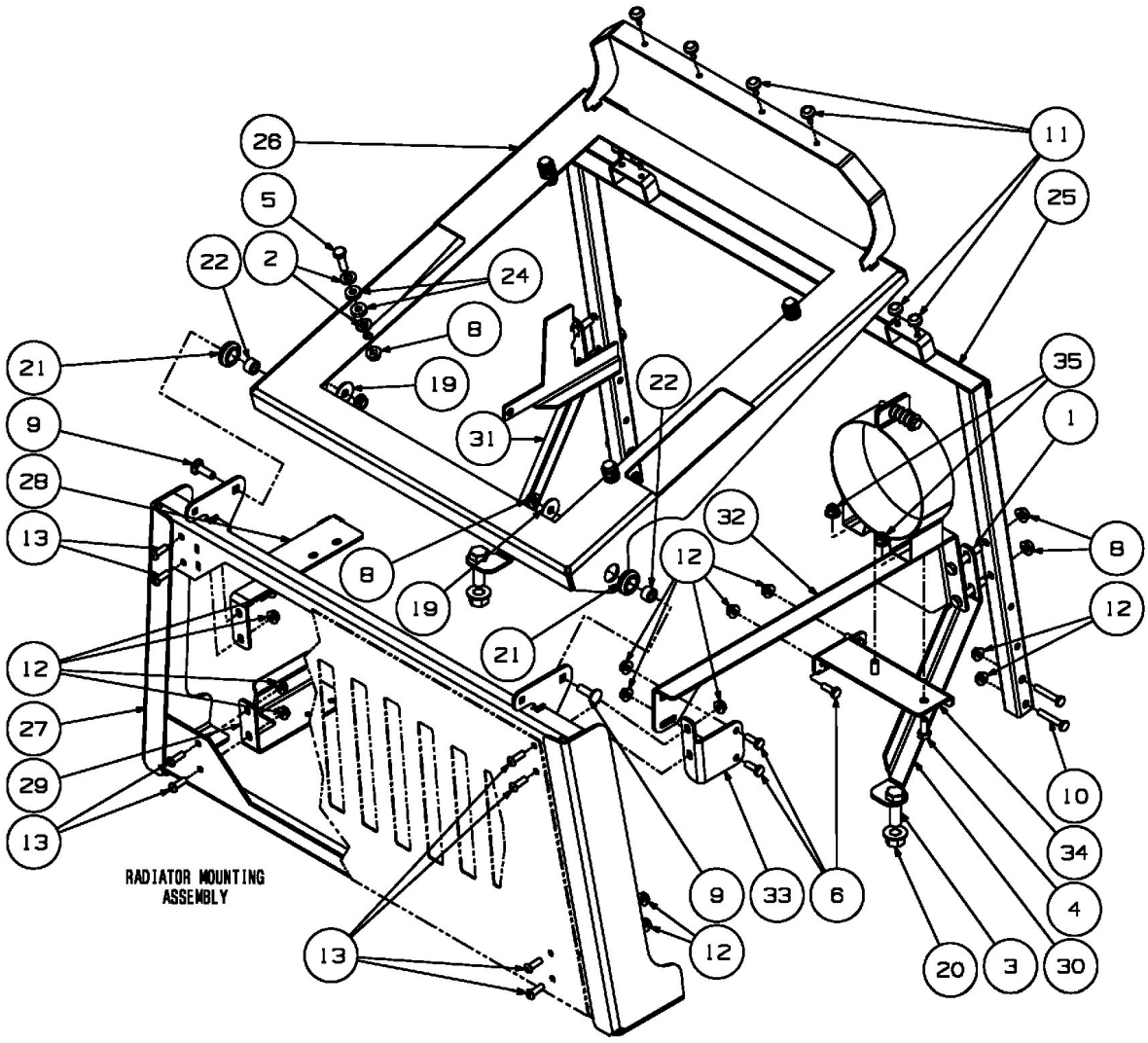
26
5
22
2
24
8
21
19
9
28
13
31
22
11
25
35
1
32
12
8
19
21
8
12
12
27
29
13
10
34
4
30
3
20
6
33
9
12
13
RADIATOR MOUNTING
ASSEMBLY

E3-05322A-01