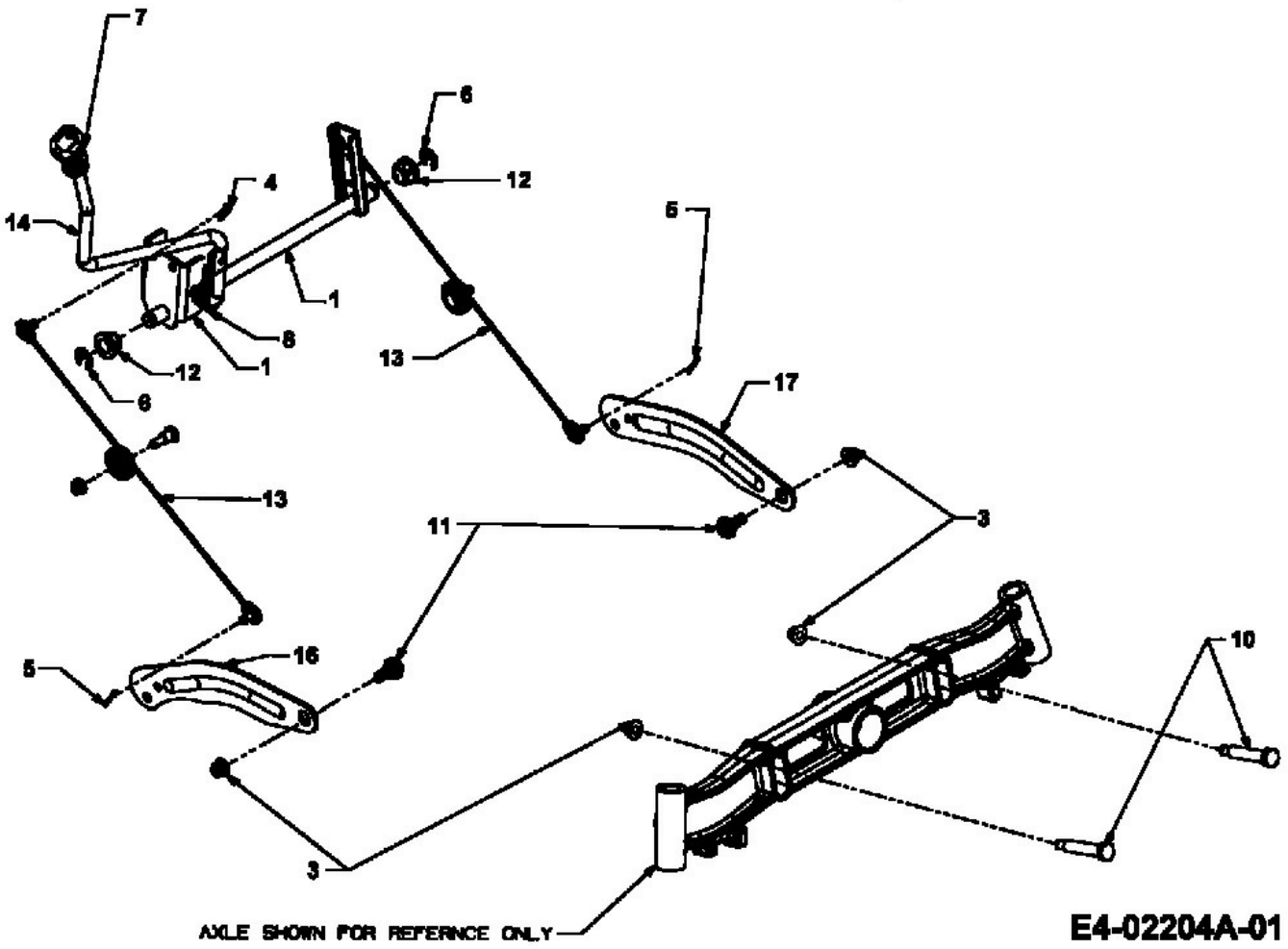
7
6
12
4
14
5
1
8
1
12
6
13
17
13
11
3
10
5
16
3
AXLE SHOWN FOR REFERNCE ONLY
E4-02204A-01