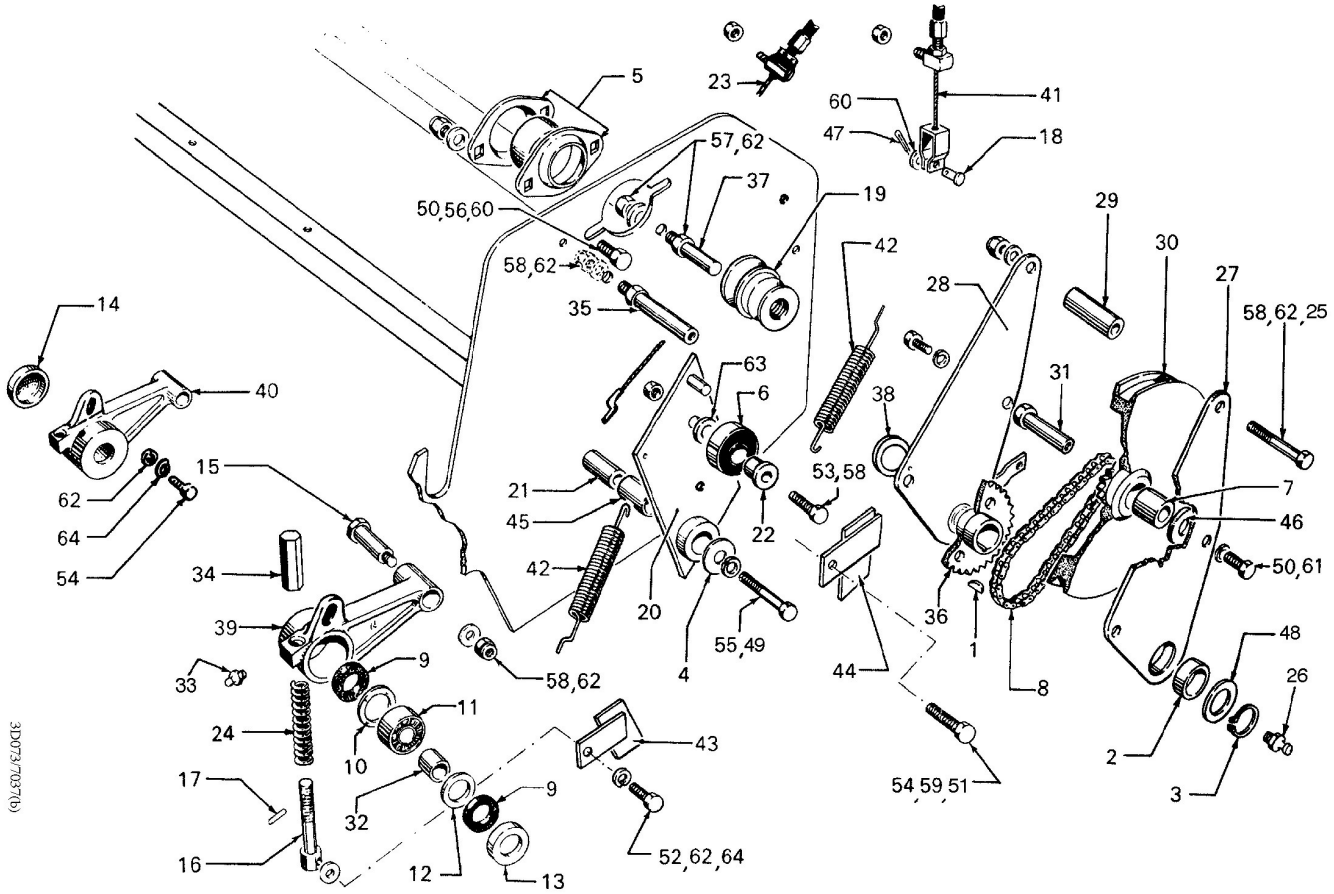
5
23
60
41
47
18
57,62
37
19
50,56,60
29
30
42
58,62
28
27
58,62,25
14
35
63
31
40
6
38
15
53,58
7
21
45
22
46
62
64
42
50,61
54
34
20
36
39
55,49
1
48
9
58,62
4
44
8
26
33
11
24
10
43
2
17
32
9
54,59,51
3
16
12
13
52,62,64

3DC2/3C2/(9)